SGSM 2000, SGCM 2000 & SGCO 2000 Tier1 and Tier2

TK 50935-4-MM (Rev. 5, 08/05)

The maintenance information in this manual covers unit models:

SGCM (062305): Model with µP-G controls and center-mount unit frame
SGSM (062306): Model with µP-G controls and side-mount unit frame
SGCO (062307): Model with µP-G controls and clip-on unit frame
SGCO (062333) Model with µP-G controls and clip-on unit frame
SGCO (062334) Model with µP-G controls, clip-on unit frame, and Tier 2 engine
SGCM (062335) Model with µP-G controls, center-mount unit frame, and Tier 2 engine
SGSM (062336) Model with µP-G controls, side-mount unit frame, and Tier 2 engine
SGCO (062337) Model with µP-G controls, clip-on unit frame, and Tier 2 engine
SGCM (062338) Model with µP-G controls, center-mount unit frame, and Tier 2 engine
SGCM (062340) Model with µP-G controls and center-mount unit frame

For further information, refer to:

SGCO 2000 Parts Manual	**TK 50952**
SGSM 2000 Parts Manual	**TK 51011**
SGCM 2000 Parts Manual	**TK 51067**
SGCO 2000 with Tier II Engine Parts Manual	**TK 52990**
SGSM 2000 Tier II Engine Parts Manual	**TK 52991**
SGCM 2000 Tier II Engine Parts Manual	**TK 52993**
TK482 and TK486 Engine Overhaul Manual	**TK 50136**
Electrostatic Discharge (ESD) Training Guide	**TK 40282**
Tool Catalog	**TK 5955**

The information in this manual is provided to assist owners, operators and service people in the proper upkeep and maintenance of Thermo King units. The Thermo King family of generator sets includes three models: SGSM, SGCM and SGCO. When maintenance information differs between models, this manual uses the model nomenclature (e.g. SGSM) to indicate that the information applies to specific units only. In addition, the model nomenclature indicates the following:

Model Nomenclature	**Unit Feature**
SG	µP-G control system
SM	Side-mount unit frame
CM	Center-mount unit frame
CO	Clip-on unit frame

This manual is published for informational purposes only and the information so provided should not be considered as all-inclusive or covering all contingencies. If further information is required, Thermo King Corporation should be consulted.

Sale of product shown in this manual is subject to Thermo King's terms and conditions including, but not limited to, the Thermo King Limited Express Warranty. Such terms and conditions are available upon request. Thermo King's warranty will not apply to any equipment which has been "so repaired or altered outside the manufacturer's plants as, in the manufacturer's judgment, to effect its stability."

No warranties, express or implied, including warranties of fitness for a particular purpose or merchantability, or warranties arising from course of dealing or usage of trade, are made regarding the information, recommendations, and descriptions contained herein. Manufacturer is not responsible and will not be held liable in contract or in tort (including negligence) for any special, indirect or consequential damages, including injury or damage caused to vehicles, contents or persons, by reason of the installation of any Thermo King product or its mechanical failure.

Recover Refrigerant

At Thermo King, we recognize the need to preserve the environment and limit the potential harm to the ozone layer that can result from allowing refrigerant to escape into the atmosphere.

We strictly adhere to a policy that promotes the recovery and limits the loss of refrigerant into the atmosphere.

In addition, service personnel must be aware of Federal regulations concerning the use of refrigerants and the certification of technicians. For additional information on regulations and technician certification programs, contact your local Thermo King dealer.

Table of Contents

List of Figures

Genset Model Features

Genset Model Features

SGSM	SGCM	SGCO	MODEL
S	S	S	TK486 Diesel Engine
S	S	S	460 Vac Output for 15 KW, 18.75 KVA, 3 Phase, 60 Hz, 4 Wire Generator
O	O	O	230 Vac Output for 15 KW, 18.75 KVA, 3 Phase, 60 Hz, 4 Wire Generator
—	O	—	230 Vac and 460 Vac Dual Receptacle for 15 KW, 18.75 KVA, 3 Phase, 60 Hz, 4 Wire Generator
S	S	S	µP-G Control System
S	S	S	Battery with Threaded Terminals
S	S	S	Battery Charging System, Solid-state
S	—	—	Side-mount Unit Frame
—	S	—	Center-mount Unit Frame
—	—	S	Clip-on Unit Frame
S	—	—	75 Gallon (284 Liter) Steel Fuel Tank
—	S	—	Integral 80 Gallon (303 Liter) Aluminum Fuel Tank
—	—	S	Integral 125 Gallon (473 Liter) Steel Fuel Tank
S	S	S	Combination Fuel Filter/Water Separator
S	S	S	Dry Air Cleaner (Oil bath on older units)
S	S	S	Silicone Coolant Hoses
S	S	S	Stainless Steel Muffler
O	O	O	Battery, Post Style
S	S	S	Fuel Heater
—	—	O	Header Pin, Mounting
—	O	—	Pre-cleaner for Air Cleaner
S*	S*	S*	EMI 3000 Extended Maintenance Interval Package

*All genset units built after February 6, 2001 (unit serial # 02136H8528 and later) include an EMI 3000 package as standard. A decal tag on the coolant expansion tank will identify units with the EMI package and extended life coolant. This package includes:

- New 5 Year or 12,000 Hour Extended Life Coolant (ELC)
- New EMI 3000 Water Pump, P/N 11-9442 (includes HNBR elastomer seals and EPDM O-rings)
- New EMI 3000 Dual Element Oil Filter, P/N 11-9182 (identified by black and gold colors)
- New EMI 3000 Dual Element Oil Filter Head, P/N 11-9354
- New EMI 3000 API Rating CG-4 Mineral Oil
- New EMI 3000 Fuel Filter, P/N 11-9342 (identified by black and gold colors)

Safety Precautions

General Practices

1. Always Wear Goggles Or Safety Glasses. Battery acid can permanently damage the eyes (see First Aid under Battery Hazards).
2. Keep your hands, clothing and tools clear of all fans, pulleys and belts when the unit is running. Be very careful with tools or meters to avoid contacting the rotor, if it is necessary to run the alternator with the end cover removed.
3. Be sure all mounting bolts are tight and the correct length for their particular application.
4. Use extreme caution when drilling holes in the unit. The holes may weaken structural components. Holes drilled into electrical wiring can cause fire, explosion or shock hazard.
5. Use caution when working around exposed coil fins. The fins can cause painful lacerations.
6. Do not work on a generator set in a confined area. Diesel exhaust can become very dangerous under certain conditions.

⚠ Battery Hazards

Few people realize just how dangerous a battery can be. The electrolyte in a lead acid battery is dilute sulfuric acid (H_2SO_4). During charge or discharge functions of a battery, a chemical change takes place within the individual cells. This causes the gas bubbling we see through the filler hole. The bubbling gases are hydrogen and oxygen. They are EXPLOSIVE. An explosion could occur if a means of ignition is present during this gassing action. A defective battery may suddenly explode even while standing idle. Added to this danger, is the fall-out of highly corrosive sulfuric acid caused by the explosion. A rubber blanket or other cover can be used to reduce the risk of injury from a possible explosion.

Precautions

1. Always wear eye protection when servicing a battery. If electrolyte is splashed on the skin or in the eyes, flush immediately under running water. Obtain medical help as soon as possible.
2. Do not remove the vent caps when charging a battery.
3. Make sure the On/Off switch is in the OFF position when disconnecting or connecting the generator set battery. This will prevent an electrical arc which could cause the battery to explode. Disconnect the ground cable first, preferably at a point AWAY FROM THE BATTERY. Connect the ground cable last, again away from the battery if possible.
4. Do not check a battery by shorting (sparking) across the battery posts. Eye injury may result from the electrical arc or from an explosion.

First Aid

- EYES: Immediately flush eyes with large amounts of water while holding the eyelids open for at least 15 minutes. Get prompt medical attention.
- SKIN: Remove contaminated clothing. Wash thoroughly with soap and water. Get medical attention if irritation persists.

⚠ Electrical Hazards

High Voltage

The possibility of serious or even fatal injury from electrical shock exists, when servicing or repairing a generator set, Extreme care must be used when working with an operating generator set. Lethal voltage potentials can exist at the unit power cord, inside the exciter control box, inside any high voltage junction box and within the wiring harnesses.

Precautions

1. Turn the generator set On/Off switch to OFF before connecting or disconnecting a power plug to the generator set receptacle. Never attempt to stop a refrigeration unit by disconnecting the power plug from an operating generator set.
2. Be certain a unit power plug is clean and dry before connecting it to the generator set receptacle.
3. Use tools with insulated handles that are in good condition. Never hold metal tools in your hand if exposed, energized conductors are within reach.
4. Stand on a solid work platform with rubber mats or dry wood if possible. If you slip, you can instinctively grab for support. This can be lethal when working on a generator set.
5. Do not make any rapid moves when working on high voltage circuits. If a tool or other object falls, do not attempt to grab it. People do not contact high voltage wires on purpose. It occurs from an unplanned movement.
6. Treat all wires and connections as high voltage until a meter and wiring diagram show otherwise.
7. Never work alone on high voltage circuits on the generator set. Another person should always be standing by in the event of an accident to shut off the generator set and to aid a victim.
8. Have electrically insulated gloves, cable cutters and safety glasses available in the immediate vicinity in the event of an accident.

First Aid

IMMEDIATE action must be initiated after a person has received an electrical shock. Obtain immediate medical assistance if available.

The source of shock must be immediately removed by either shutting down the power or removing the victim from the source. If it is not possible to shut off the power, the wire should be cut with either an insulated instrument (e.g., a wooden handled axe or cable cutters with heavy insulated handles) or by a rescuer wearing electrically insulated gloves and safety glasses. Whichever method is used, do not look at the wire while it is being cut. The ensuing flash can cause burns and blindness.

If the victim has to be removed from a live circuit, pull the victim off with a non-conductive material. Use the victim’s coat, a rope, wood, or loop your belt around the victim’s leg or arm and pull the victim off. DO NOT TOUCH the victim. You can receive a shock from current flowing through the victim’s body.

After separating the victim from the power source, check immediately for the presence of a pulse and respiration. If a pulse is not present, start CPR (Cardio Pulmonary Resuscitation) and call for emergency medical assistance. If a pulse is present, respiration may be restored by using mouth-to- mouth resuscitation, but call for emergency medical assistance.

Low Voltage

Control circuits are low voltage (12 Vdc). This voltage potential is not considered dangerous, but the large amount of current available (over 30 amperes) can cause severe burns if shorted to ground.

Disconnect the negative terminal of the battery if possible when working on the generator set. Disconnect the cable end that is away from the battery.

Do not wear jewelry, watches or rings. These items can short out and cause severe bums to the wearer.

General Safety Precautions for Servicing Units (or Containers) Equipped with a Microprocessor Controller

Precautions must be taken to prevent electrostatic discharge during service of the µP-G microprocessor controller and related components. The risk of significant damage to the electronic components of the unit is possible If these precautionary measures are not followed.

The primary risk potential results are as follows:

- The failure to wear adequate electrostatic discharge preventive equipment when handling and servicing the controller.
- Electric welding on the unit and/or container chassis without taking precautionary steps.

Controller Repair

It’s necessary to ensure that electrostatic discharges are avoided when servicing the controller. Potential differences considerably lower than those which produce a small spark from a finger to a door knob can severely damage or destroy solid-state integrated circuit components. The following procedures must be rigidly adhered to when servicing these units to avoid controller damage or destruction.

1. Turn the generator set OFF.
2. Disconnect the negative terminal of the battery. Disconnect the cable end that is away from the battery.
3. Avoid wearing clothing that generates static electricity (wool, nylon, polyester, etc.).
4. Wear a static discharge wrist strap (TK P/N 204-622) with the lead end connected to the controller's ground terminal. These straps are available at most electronic equipment distributors. DO NOT wear these straps with power applied to the unit.
5. Avoid contacting the electronic components on the unit circuit boards.
6. Leave the circuit boards in their static proof packing materials until ready for installation.
7. If a defective controller is to be returned for repair, it should be returned in the same static protective packing materials from which the replacement component was removed.
8. After servicing the circuit board and any other circuits, the wiring should be checked for possible errors before restoring power.

Welding of Units or Containers

It is necessary to ensure that welding currents are NOT allowed to flow through the electronic circuits of the unit. This includes whenever electric welding is to be performed on any portion of the generator set, container or container chassis with the generator set attached. These procedures must be rigidly adhered to when servicing these units to avoid damage or destruction.

1. Disconnect all power to the generator set.
2. Disconnect all quick-disconnect wire harnesses from the back of the controller.
3. Switch all of the electrical circuit breakers in the control box to the OFF position.
4. Weld unit and/or container per normal welding procedures. Keep ground return electrode as close to the area to be welded as practical. This will reduce stray welding currents passing through any electrical or electronic circuits.
5. When the welding operation is completed, the unit power cables, wiring and circuit breakers must be restored to their normal condition.

Safety Do’s and Don’ts

DO:

- **Do** perform your tasks carefully, without undue haste.
- **Do** provide a fire extinguisher (rated ABC).
- **Do** provide a First Aid kit (for bums and abrasions). Obtain medical attention.
- **Do** use the correct tools for the job you are doing.
- **Do** make sure that all fasteners are secure.

- **Do** use extreme care while making adjustments on the generator set while it is running.
- **Do** keep your hands away from moving parts.
- **Do** disconnect the battery before starting work on a generator set.
- **Do** use screwdrivers, pliers, diagonal pliers. etc. with insulated handles.
- **Do** obtain CPR (Cardio Pulmonary Resuscitation) and mouth-to-mouth resuscitation knowledge.
- **Do Practice Safety, The Life You Save May Be Your Own.**

⚠ DO NOT

- **Don't** allow inexperienced personnel to work on the generator or electrical equipment.
- **Don't** remove guards or protective devices.
- **Don't** wear loose clothing or jewelry in the vicinity of moving parts. These can get in machinery, with disastrous results. Don't wear jewelry while working on electrical equipment. If your hair is long, wear a head covering. Hair caught in a drill press, fan belt or other moving parts can cause serious injury.
- **Don't** stand on a wet floor while working on electrical equipment. Use rubber insulated mats placed on dry wood platforms.
- **Don't** lunge after a dropped tool. To do so may place you in a position of extreme danger.
- **Don't** commence any operation until you have taken all the necessary steps to ensure that you are in complete safety.

Serial Number Locations

Generator: The generator nameplate is attached to the generator housing.

Engine: The engine serial number is stamped on the back side of the engine block.

SGSM Units: The unit serial number nameplate is attached to the bottom frame member inside the engine compartment access door.

SGCM Units: The unit serial number nameplate is attached to the unit frame below the engine compartment access door.

SGCO Units: The unit serial number nameplate is attached to the unit battery box beside the engine compartment.

µP-G Controller: The controller serial number nameplate is on the back of the controller.

Unit Decals

Serial number decals, installation decals and warning decals appear on all Thermo King generator sets. These decals provide information that may be needed to service or repair the unit. Service technicians should read and follow the instructions on all warning decals.

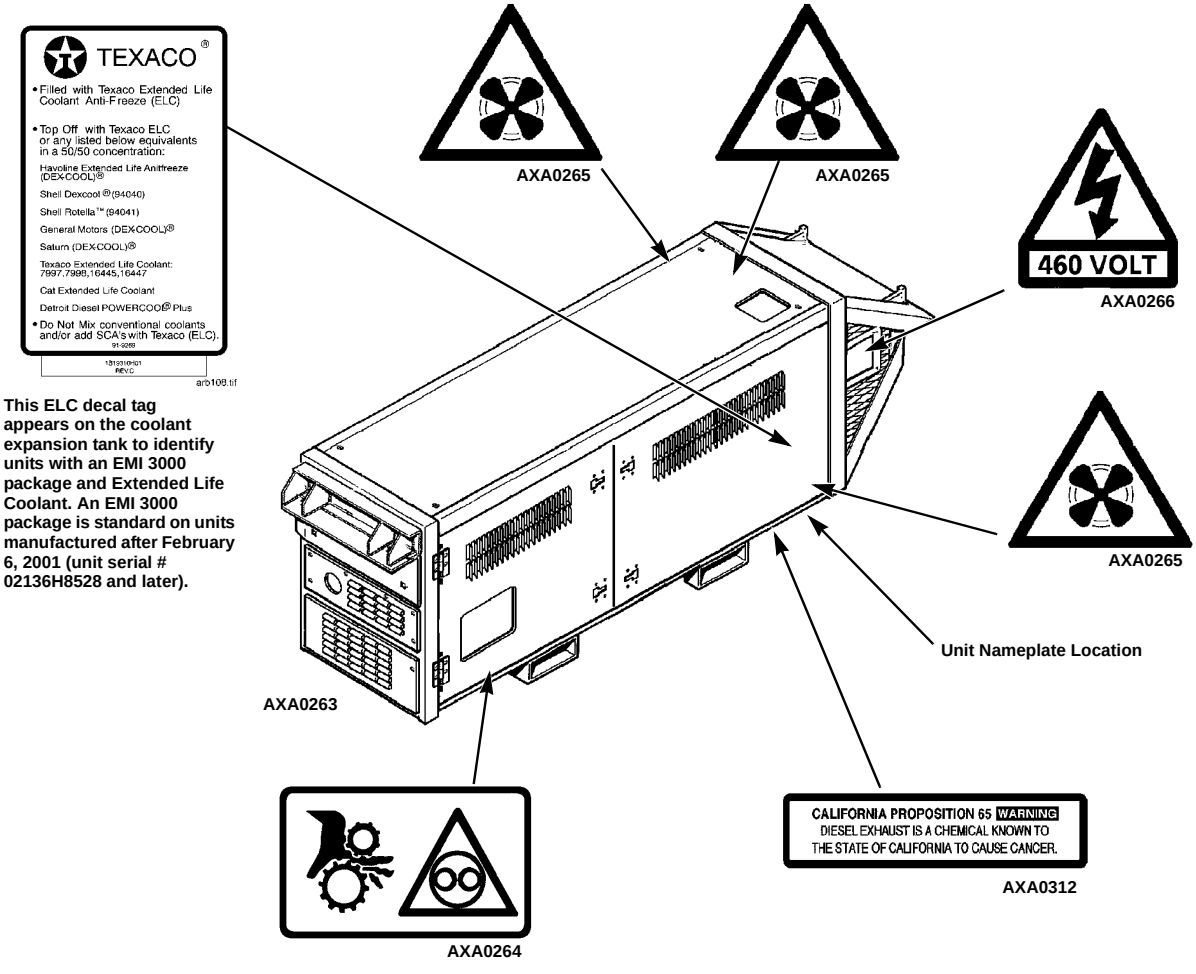

This ELC decal tag appears on the coolant expansion tank to identify units with an EMI 3000 package and Extended Life Coolant. An EMI 3000 package is standard on units manufactured after February 6, 2001 (unit serial # 02136H8528 and later).

Figure 1: Model SGSM 2000 Decals

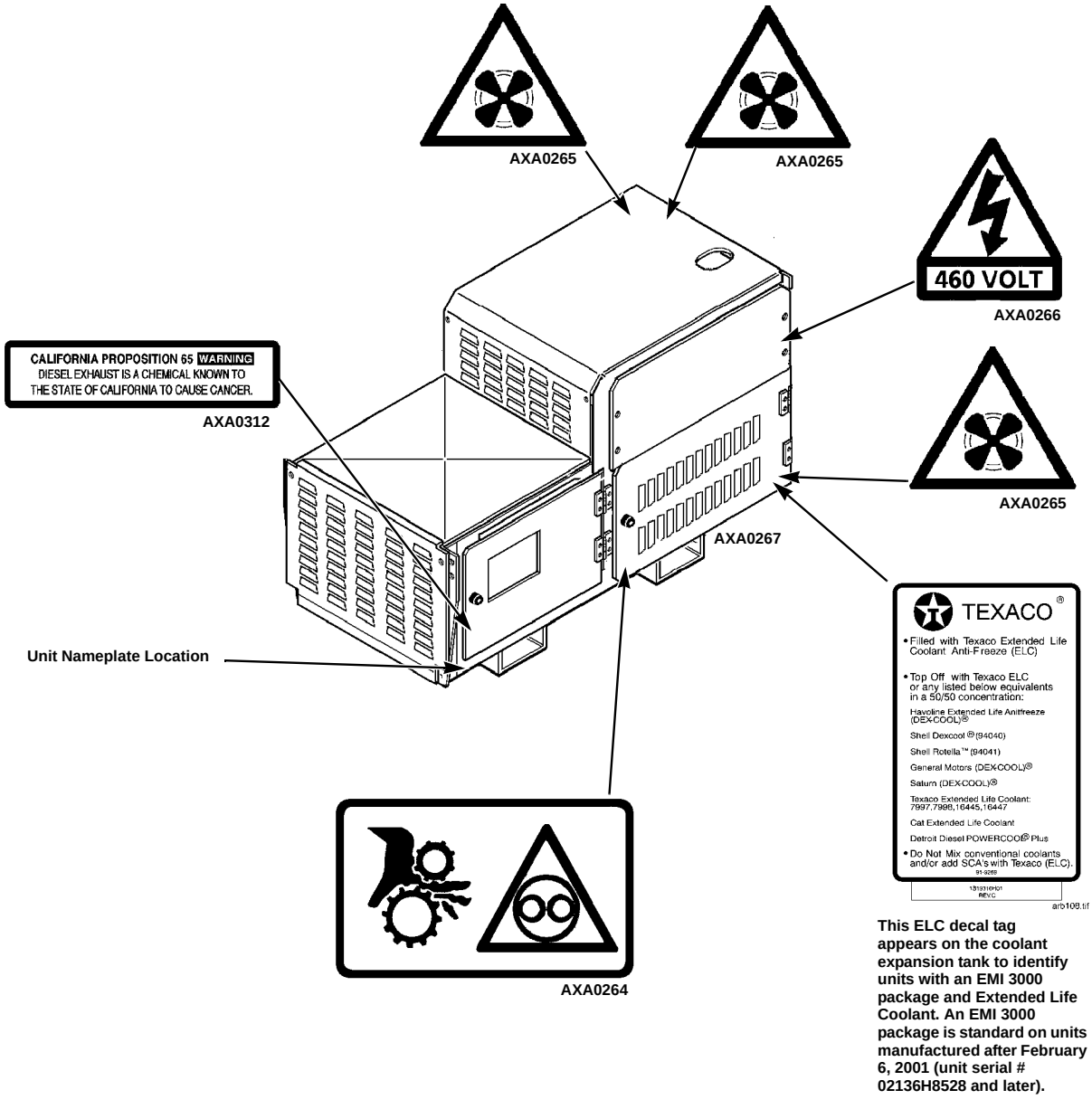

This ELC decal tag appears on the coolant expansion tank to identify units with an EMI 3000 package and Extended Life Coolant. An EMI 3000 package is standard on units manufactured after February 6, 2001 (unit serial # 02136H8528 and later).

Figure 2: Model SGCM 2000 Decals

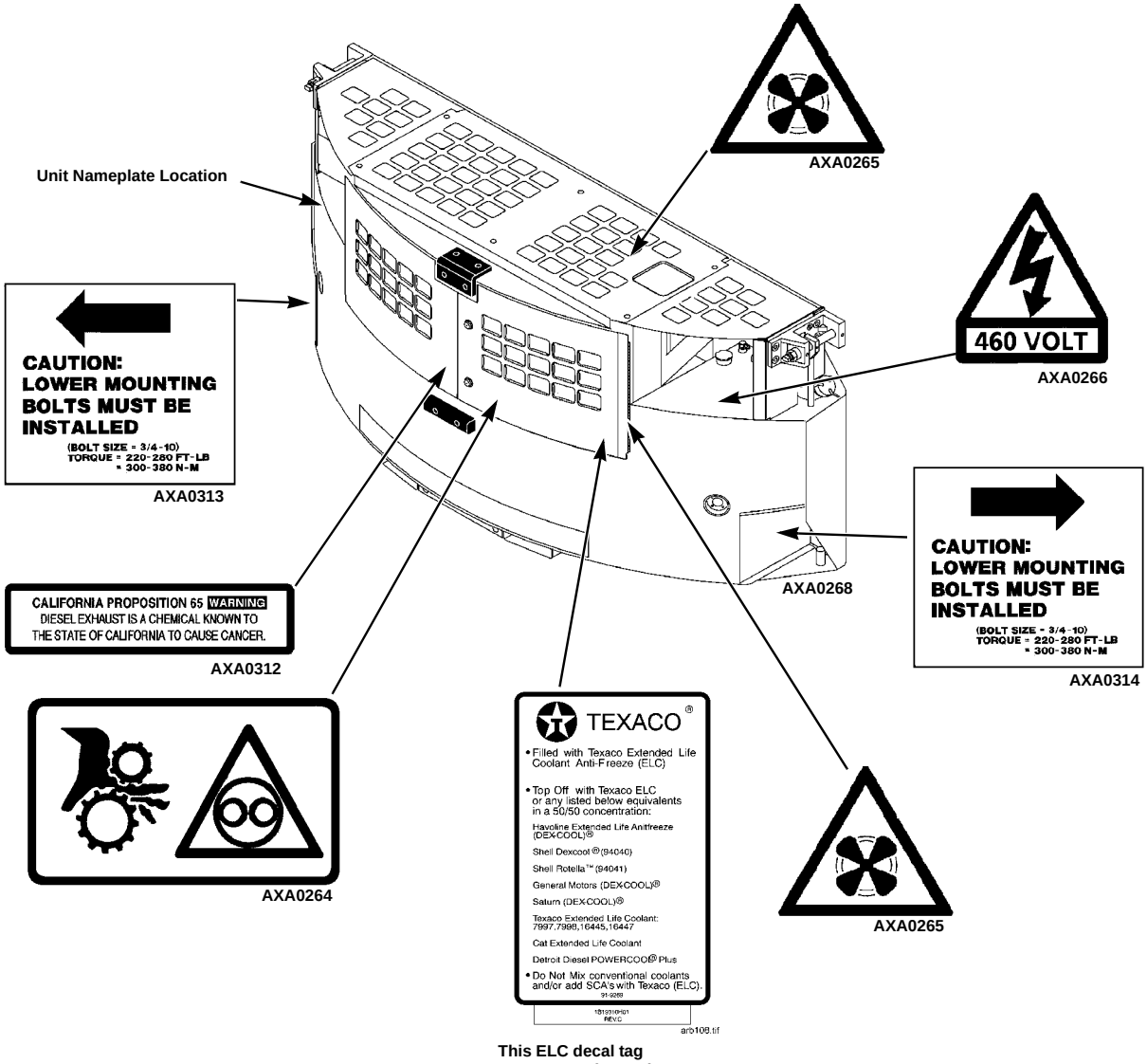

This ELC decal tag appears on the coolant expansion tank to identify units with an EMI 3000 package and Extended Life Coolant. An EMI 3000 package is standard on units manufactured after February 6, 2001 (unit serial # 02136H8528 and later).

Figure 3: Model SGCO 2000 Decals

Service Guide

Units Built Before 2/6/01 (Before Unit Serial # 02136H8528)

This table is for Models SGSM 2000, SGCM 2000 and SGCO 2000.

Pre-Trip	Every 250[1] Hours	Every 1,500 Hours	Every 3,000 Hour/ Annual	Inspect/Service These Items
				Electrical
•				Perform a controller Pretrip (PrE) check.
•	•	•	•	Inspect battery terminals and electrolyte level.
		•	•	Inspect wire harness for damaged wires or connections.
				Engine
•				Check fuel supply and fill.
•	•	•	•	Check engine oil level and fill as needed.
•	•	•	•	Check engine coolant level. (CAUTION: Do not remove radiator cap while coolant is hot.)
•	•	•	•	Inspect belt for condition and proper tension.
•	•	•	•	Check engine oil pressure hot, on high speed. Minimum 276 kPa, 2.76 bar, 40 psi.
•	•	•	•	Listen for unusual noises, vibrations, etc.
•	•	•	•	Inspect/clean fuel transfer pump inlet strainer.
	•	•	•	Remove and clean air cleaner (and pre-cleaner). Install new oil in oil bath air cleaner assembly. Check air cleaner hose and breather hose for damage.
		•[3]	•	Change engine oil[2] (hot) and oil filter.
	•	•	•	Remove and clean crankcase breather.
	•	•	•	Drain water from fuel tank and check vent. Clean fuel strainer in transfer pump inlet.
	•	•	•	Check and adjust engine speed at full load (60 Hz alternator output).
			•[3]	Change single element fuel filter/water separator every 2,500 hours.
			•	Check condition of engine mounts.
			•	Change standard (green or blue-green) engine coolant. Maintain antifreeze protection at -34 C (-30 F).

[1]Inspect/service every 250 operating hours in extreme (dirt yard) operating conditions.
[2]Every 3,000 hours on engines equipped with synthetic oil, but oil filter must still be changed at 1,500 hour intervals.
[3]More frequent intervals may be necessary in extreme operating conditions.
Structural Service Guide continued on next page.

Service Guide Continued

Pre-Trip	Every 250[1] Hours	Every 1,500 Hours	3,000 Hour/ Annual	Inspect/Service These Items
				Structural
•	•	•	•	Visually inspect unit for fluid leaks (coolant and oil).
•	•	•	•	Visually inspect unit for damaged, loose or broken parts.
	•	•	•	Clean entire unit including radiator coil.
		•	•	Check all unit, fuel tank, engine and alternator mounting bolts, brackets, lines, hoses, etc.

[1]Inspect/service every 250 operating hours in extreme operating conditions.

Units Built After 2/6/01 (Unit Serial # 02136H8528 and After)

This table is for Models SGSM 2000, SGCM 2000 and SGCO 2000.

Pre-Trip	Every 250[1] Hours	3,000 Hour[2]/ Annual	Inspect/Service These Items
			Electrical
			Electrical
•			Perform a controller Pretrip (PrE) check.
•	•	•	Inspect battery terminals and electrolyte level.
		•	Inspect wire harness for damaged wires or connections.
			Engine
•			Check fuel supply and fill.
•	•	•	Check engine oil level and fill as needed.
•	•	•	Check engine coolant level. (CAUTION: Do not remove radiator cap while coolant is hot.)
•	•	•	Inspect belt for condition and proper tension.
•	•	•	Check engine oil pressure hot, on high speed. Minimum 276 kPa, 2.76 bar, 40 psi.
•	•	•	Listen for unusual noises, vibrations, etc.
•	•	•	Inspect/clean fuel transfer pump inlet strainer.
	•	•	On units with oil bath air cleaner (built before 11/15/02) remove and clean air cleaner (and pre-cleaner). Install new oil in oil bath air cleaner assembly. Check air cleaner hose and breather hose for damage.
•		•	On units with dry element air cleaner (built after 11/15/02) check air cleaner restriction indicator (change filter when indicator reaches 25 in.). Replace air cleaner element at 3,000 hours or two years (whichever occurs first) if indicator has not reached 25 in.
	•	•	Remove and clean crankcase breather.
	•	•	Drain water from fuel tank and check vent. Clean fuel strainer in transfer pump inlet.
	•	•	Check and adjust engine speed at full load (60 Hz alternator output).
		•	Change engine oil[2] (hot) and oil filter.

Pre-Trip	Every 250[1] Hours	3,000 Hour[2]/ Annual	Inspect/Service These Items
		•	Change engine oil (hot) and oil filter.[3]
		•	Change fuel filter/water separator.[3]
		•	Check condition of engine mounts.
		—	Change ELC (red) engine coolant every 5 years or 12,000 hours. Maintain antifreeze protection at -34 C (-30 F).
			Structural
•	•	•	Visually inspect unit for fluid leaks (coolant and oil).
•	•	•	Visually inspect unit for damaged, loose or broken parts.

[1]Inspect/service every 250 operating hours in extreme (dirt yard) operating conditions.
[2]3,000 hours or 2 years, whichever occurs first.
[3]More frequent intervals may be necessary in extreme operating conditions.

Specifications

Engine

Diesel Engine Model: Units Built Before 04/25/05 Units Built After 04/25/05	 TK486E (Tier 1) TK486V (Tier 2)
Fuel Type	No. 2 Diesel fuel under normal conditions No. 1 Diesel fuel is acceptable cold weather fuel
Oil Capacity Crankcase: Crankcase and Oil Filter:	 12.3 litre (13 qt) 13.3 litre (14 qt) Fill to full mark on dipstick
Oil Type: Classification:	 Multi-grade Petroleum Oil (Standard) Synthetic Oil (Optional) after first 500 hours API Type CG-4, CH-4 or better ACEA Type E2, E3 or better
Oil Viscosity -30 C to +0 C (-22 F to +32 F): -25 C to +30 C (-13 F to +86 F): -25 C to +40 C (-13 F to +104 F): -15 C to +50 C (+5 F to +122 F):	 SAE 5W-30 SAE 10W-30 SAE 10W-40 SAE 15W-40
Engine Oil Pressure: TK486E (Tier 1) TK486V (Tier 2)	 100 to 380 kPa (1.0 to 3.8 bar) (15 to 55 psi) 120 to 320 kPa (1.2 to 3.2 bar) (18 to 47psi)
Engine RPM Full Load (60 Hz Alternator): No Load:	 1800 ± 10 RPM (High Speed) 1890 ± 10 RPM (High Speed)
Valve Clearance	0.15 to 0.25 mm (0.006 to 0.010 in.) on intake valve
Valve Setting Temperature	21 C (70 F) (Room Temperature)
Timing Injection Pump: TK486E (Tier 1) TK486V (Tier 2)	 10 Degrees ± 1 Degree BTDC (timed on No. 1 cylinder) N/A
Low Oil Pressure Switch (Normally Closed)	117 ± 21 kPa (1.17 ± 0.21 bar) (17 ± 3 psi)
High Coolant Temperature Switch*	Sensor*
Engine Thermostat: TK486E (Tier 1) TK486V (Tier 2)	 82 C (180 F) 71 C (160 F)
Coolant System Capacity	9.5 liter (10 qt) with overflow tank
Engine Coolant Type: Units Built Before 2/6/01	 GM6038M or equivalent: Conventional blue or blue-green, low silicone, 50/50 antifreeze and water mixture, not to exceed 60/40
Units Built After 2/6/01**	Texaco ELC (Extended Life Coolant) or equivalent: ELC red coolant, 50/50 antifreeze and water mixture, not to exceed 60/40
Radiator Cap Pressure	90 kPa (0.90 bar) (13 psi)
Fan/Water Pump Belt Tension New or Field Reset:	 15 to 35 tension number on belt tension gauge, TK P/N 204-427; or 19 to 25 mm (0.75 to 1.0 in.) deflection with 3 to 4 Kg (6 to 9 lb) of force

* µP-G controller uses a sensor to provide engine high coolant temperature protection.

** Units with serial # 02136H8528 and after.

Generator

Type	460/230 Vac, 3 Phase, 60 Hz
Output Power	15 kw
Kilovolt-Amperes	18.75 kVA
RPM	1800 RPM

Electrical Control System

Controls	µP-G microprocessor controller
Voltage	12.5 Vdc (nominal)
Battery:	
TK486E (Tier 1)	12 volts, group C31, 625 Cold Cranking Amps at -18 C (0 F)
TK486V (Tier 2)	12 volts, group C31, 950 Cold Cranking Amps at -18 C (0 F)
Battery Charging	Alternator (take off from exciter)
Voltage Regulator Setting	13.8 to 14.2 volts @ 25 C (77 F)
Fusible Link	18 gauge wire (50 to 55 amperes)
12 Vdc Control Circuit Breaker: Automatic Reset	25 ampere

Electrical Components

NOTE: Disconnect components from unit circuit to check resistance.

	Current Draw (Amperes) at 12.5 Vdc	Resistance (Ohms)
Air Heater	89	0.14
Fuel Solenoid:		
Pull-in	35 to 45	0.2 to 0.3
Hold-in	0.5 to 1.0	24 to 29
Starter Motor:		
TK486E (Tier 1)	250 to 375 (cranking) 80 (bench test)	
TK486V (Tier 2)	400 (cranking) 140 (bench test)	

Physical Specifications

Weight (net): SGSM 2000	685 Kg (1510 lbs) including oil, coolant, battery and 284 liter (75 gal.) fuel tank (excluding fuel)

Unit Dimensions

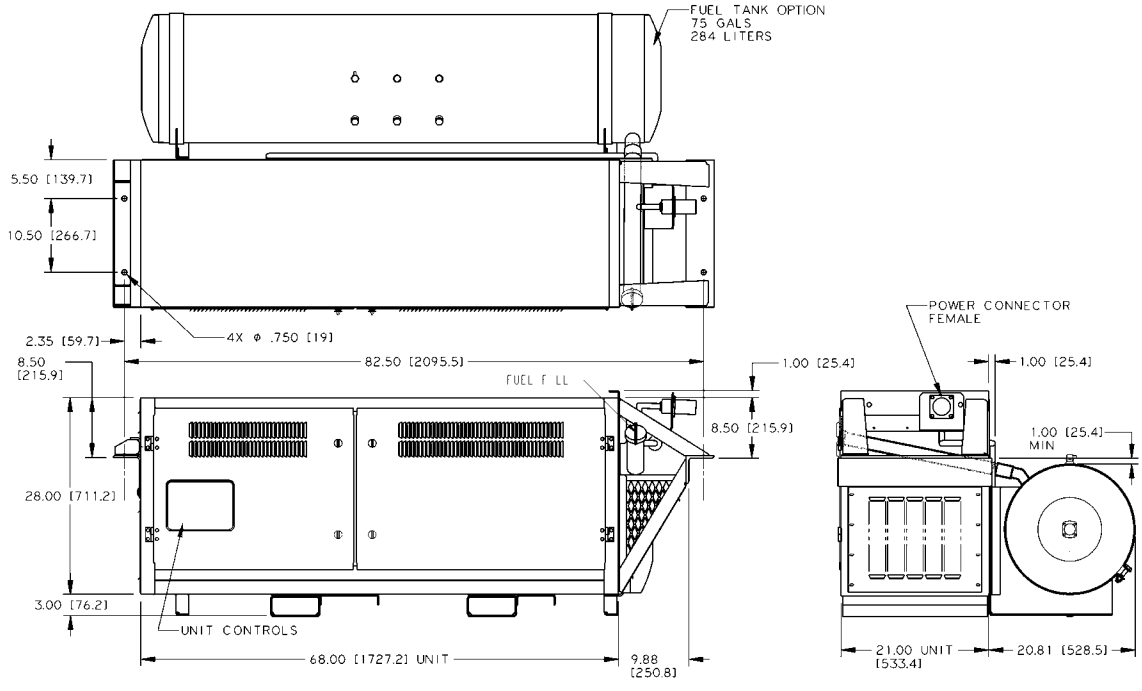

AXA0269

Physical Specifications

Weight (net): SGCM 2000	658 Kg (1450 lbs) including oil, coolant, battery and 303 liter (80 gal.) fuel tank (excluding fuel)

Unit Dimensions

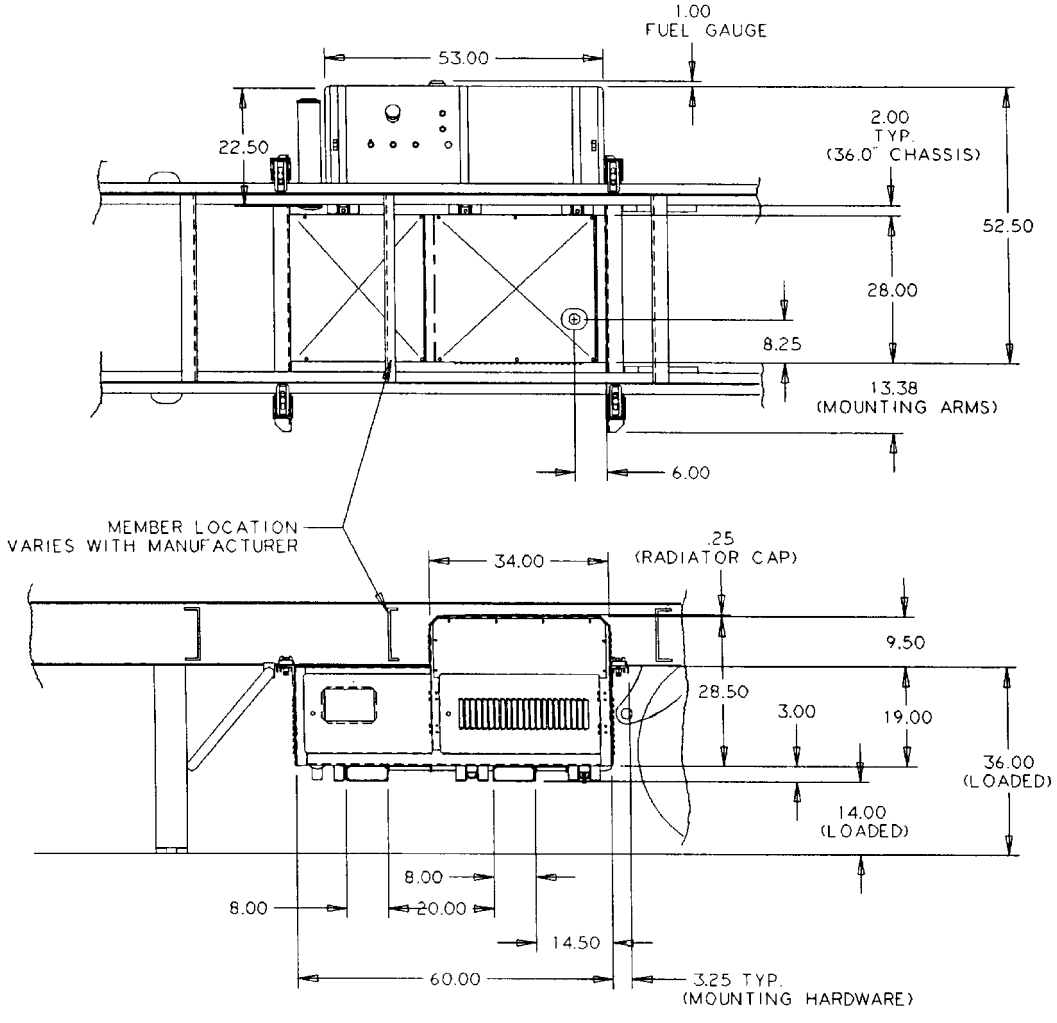

AXA0270

Physical Specifications

Weight (net): SGCO 2000	843 Kg (1860 lbs) including oil, coolant, battery and 473 liter (125 gal.) fuel tank (excluding fuel)

Unit Dimensions:

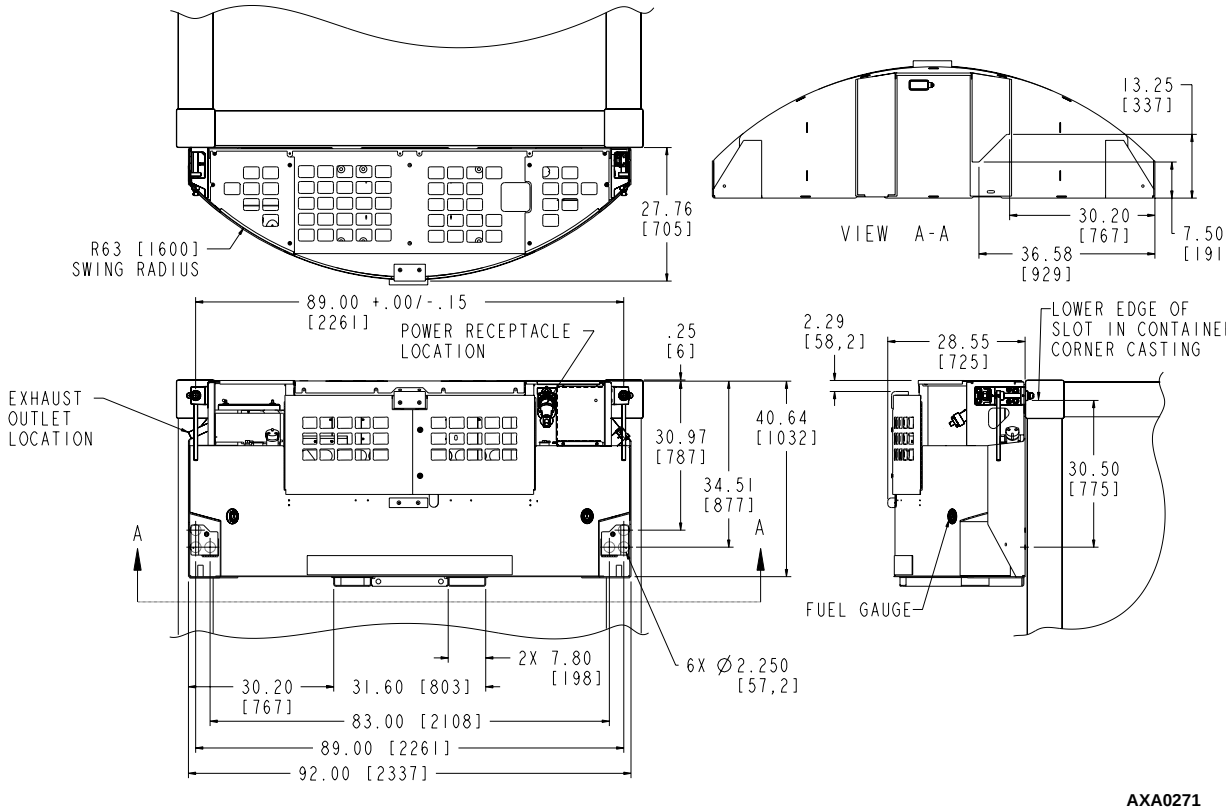

AXA0271

Metric Hardware Torque Charts

Bolt Type and Class*	Bolt Size			
	M6	M8	M10	M12
	N.m (Ft.-lb.)	N.m (Ft.-lb.)	N.m (Ft.-lb.)	N.m (Ft.-lb.)
HH – CL 5.8	6-9 (4-7)	12-16 (9-12)	27-34 (20-25)	48-61 (35-40)
HH – CL 8.8	10-13 (7-10)	20-27 (15-20)	41-47 (30-35)	75-88 (55-65)
HH – CL 10.9	14-17 (10-13)	27-34 (20-25)	54-68 (40-50)	102-122 (75-90)
HH – CL 12.9	17-21 (12-16)	41-47 (30-35)	68-81 (50-60)	122-149 (90-110)
HH – SS (2)	10-13 (7-10)	20-27 (15-20)	41-47 (30-35)	75-88 (55-65)

Bolt Type and Class*	Bolt Size			
	M14	M16	M18	M22
	N.m (Ft.-lb.)	N.m (Ft.-lb.)	N.m (Ft.-lb.)	N.m (Ft.-lb.)
HH – CL 5.8	75-88 (55-65)	115-135 (85-100)	177-216 (130-160)	339-406 (250-300)
HH – CL 8.8	115-135 (85-100)	177-216 (130-160)	271-339 (200-250)	475-610 (350-450)
HH – CL 10.9	136-176 (100-130)	224-298 (180-220)	393-474 (290-350)	678-813 (500-600)
HH – CL 12.9	177-216 (130-160)	285-352 (210-260)	448-542 (330-400)	881-1016 (650-750)
HH – SS (2)	115-135 (85-100)	177-216 (130-160)	271-339 (200-250)	475-610 (350-450)

*HH = Hex Head, CL = Class.

Unit Description, Features & Options

General Description

Thermo King generator sets (clip-on, center mount and side-mount) are self-contained fully-automatic, diesel powered units. The generator sets supply 230 or 460 Vac electrical power for container refrigeration units. Enclosed within the unit frame are the engine, dual voltage alternator, generator battery compartment, battery charging regulator and control panel.

CAUTION: DO NOT attempt to operate or maintain the generator until you have completely familiarized yourself with the equipment.

An exclusive TK 486, direct injection diesel engine drives a brushless generator to produce 15 KW of output power at 49 C (120 F) ambient temperature. A weatherproof box fastened inside the unit contains the unit controls.

Each unit features a welded, heavy-gauge steel frame with special sea-going finish; non-corrosive fittings, all stainless steel external hardware, copper tube aluminum fin radiator, and poly-vinyl coating on the engine and generator.

Fuel tanks are provided as an integral part of each unit. Fuel capacities are: 473 liter (125 gal.) on SGCO clip-on models; 303 liter (80 gal.) on SGCM center mount models; and 284 liter (75 gal.) on SGSM side mount models.

The alternator is a brushless, rotating field ac generator. A rectified exciter armature output provides dc power for the field. The exciter field obtains its power from the full wave rectified output of the main generator. The alternator supplies 230 or 460 Vac, 3 phase, 4 wire, 60 Hz power at 1800 RPM.

This equipment develops normal output voltages (below 600 volts) whenever the engine is running. All output voltages normally reach 460 volts. Under malfunction conditions, 575 volts may be produced. Any electric potential more than 50 volts is hazardous. Exercise caution and discretion in the operation and maintenance of the equipment.

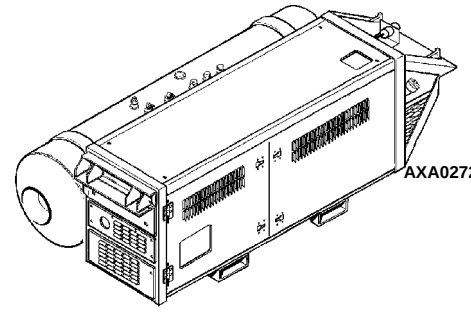

Figure 4: SGSM 2000 Side Mount Generator

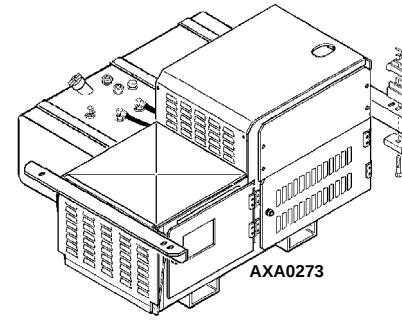

Figure 5: SGCM 2000 Center Mount Generator

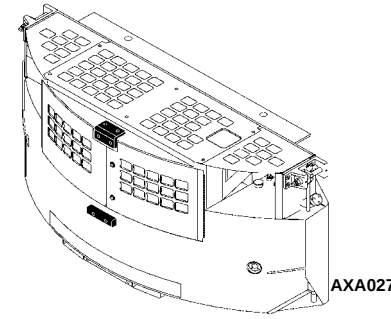

Figure 6: SGCO 2000 Clip On Generator

EMI 3000 Package

Gensets built after 2/6/01 (unit serial number 02136H8528 and after) include an EMI 3000 Extended Maintenance Interval package. Introduction of the EMI 3000 package will result in lower total unit life cycle cost. Because maintenance intervals have an important impact on unit operating costs.

The EMI 3000 package includes:

- 5 Year or 12,000 Hour Extended Life Coolant (ELC)
- EMI 3000 Water Pump, P/N 11-9442 (includes HNBR elastomer seals and EPDM O-rings)
- EMI 3000 Dual Element Oil Filter, P/N 11-9182 (identified by black and gold colors)
- EMI 3000 Dual Element Oil Filter Head, P/N 11-9354
- EMI 3000 API Rating CI-4 Mineral Oil
- EMI 3000 Fuel Filter, P/N 11-9342 (identified by black and gold colors)

EMI 3000 equipped units are identified by a “Texaco ELC” decal tag on the coolant expansion tank, and gold and black colored oil and fuel filters. The EMI 3000 package allows standard genset maintenance intervals to be extended to 3000 hours. However, please note that units equipped with the EMI 3000 package still require regular inspection in accordance with Thermo King pretrip inspection and maintenance recommendations (see the Service Guide chapter in this manual).

µP-G Microprocessor Controller

The µP-G Microprocessor controller controls and monitors unit operation, records system faults and performs an automatic pre-trip check. The controller monitors all unit protection shutdown functions and the exciter system.The controller shuts down unit operation if a low oil level, low oil pressure, high water temperature or alternator overload condition exists for more than 30 seconds. The module also delays excitation power supply for 15 seconds after unit start-up.

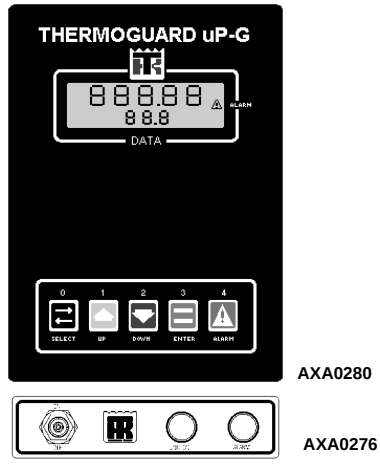

Figure 7: µP-G Microprocessor Controller

Unit Instruments

INDICATOR LEDs.

a. UNIT ON LED: A green unit “On” indicator LED FLASHES while the air heater and starter motor are energized. The unit “On” light then illuminates to indicate normal unit operation. This indicator is located below the Controller.

b. ENGINE SHUTDOWN LED: A red Engine Shutdown LED illuminates when a shutdown condition has occurred. This indicator is located below the Controller.

FUEL GAUGE. A gauge mounted in the fuel tank indicates the level of diesel fuel in the tank.

Unit Protection Devices

WARNING: the unit may start at any time without warning when the unit On/Off switch in the On position.
Units equipped with a µP-G controller feature AUTO-RESTART. The controller will make up to three attempts every 20 minutes to restart the unit after a shutdown has occurred. This restart mode continues until the unit has been successfully restarted or until a alarm code 61 is generated due to low battery.
Protection shutdown devices that cause an AUTO-RESTART shutdown condition include:
- ***Low Oil Pressure***
- ***Low Oil Level***
- ***High Water Temperature***

Low Oil Pressure Switch: Engine oil pressure should rise immediately on starting. The controller will stop the engine if oil pressure drops below 117 ± 21 kPa, (1.17 ± 0.21 bar), (17 ± 3 psig) for more than 30 seconds, and the oil level drops below 8 qt (7.6 litres) (Also see oil level sensor below). The controller then activates the alarm light and the alarm icon in the display.

Oil Level Sensor: An oil level switch closes if the oil level drops below 8 qts. (7.6 liters) and the oil pressure drops below 117 ± 21 kPa (Also see low oil pressure switch above). The controller will stop the engine if the switch stays closed for more than 30 seconds. The controller then activates the Alarm light and the Alarm icon in the display.

Water Temperature Sensor: The controller will stop the engine if the engine coolant temperature rises to 101.7 to 107.2 C (215 to 225 F) for more than 30 seconds. The controller also activates the Alarm light and the Alarm icon in the display. The unit will restart when the coolant temperature drops to 88 C (190 F).

Unit Circuit Breaker: A 12-volt circuit breaker (CB1) is located on the exciter tray assembly. It will trip if the 12 Vdc control circuit overloads above 25 amps. The circuit breaker will reset automatically if the unit switch is left in the OFF position for a short period of time. This circuit breaker does not protect the air heater circuit.

Current Limiter: The current limiter is a fusible link acting as a connection between the ammeter and the 12 Vdc unit controls. At approximately 50 to 55 amps, the fusible link will melt, cutting power to the air heater and the rest of the unit.

Dual Voltage Option

A power cable and receptacle wired for 230 Vac or 460 Vac is supplied as standard equipment with each generator. SGCM center mount models can be wired for dual receptacles: 230 Vac or 460 Vac.

Additional Options

Header pin mounting (SGCO clip-on models only).

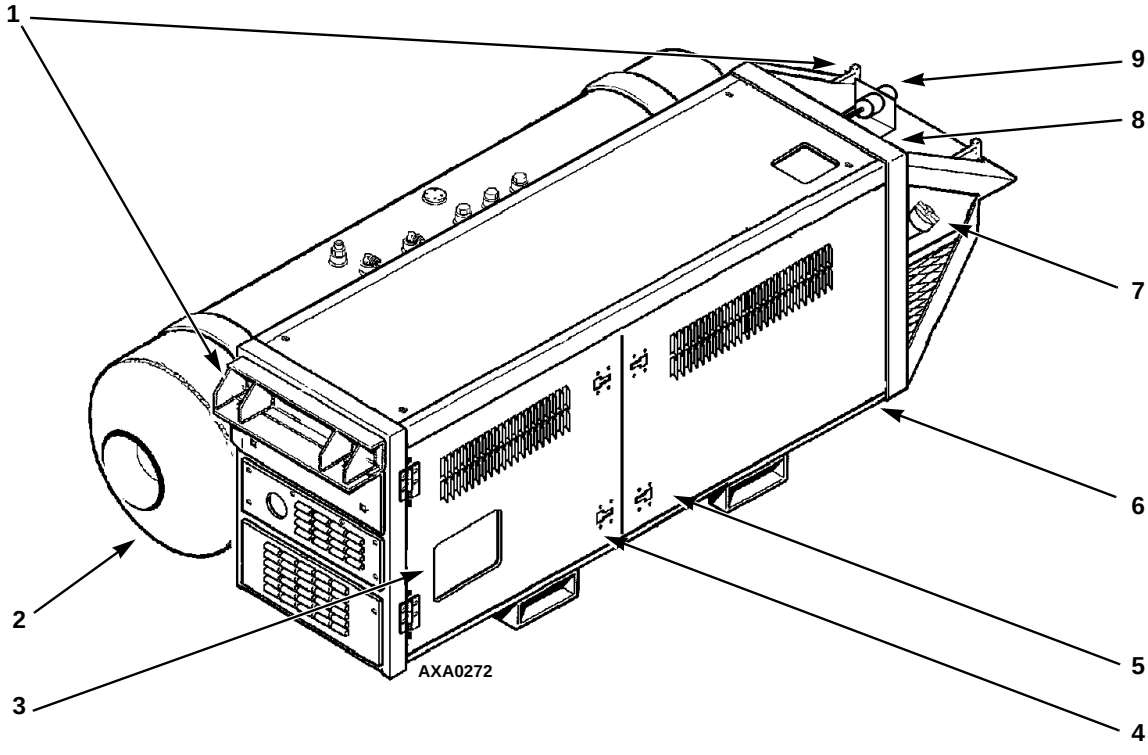

1.	Unit Mounting Arms	6.	Unit Nameplate Location
2.	Fuel Tank	7.	Fuel Tank Fill Neck and Cap
3.	Control Box Cover	8.	Coolant Expansion Tank Location: A “TEXACO ELC” decal tag identifies units built after 2/6/01 that are equipped with the EMI 3000 package and Extended Life Coolant.
4.	Alternator and Control Box Compartment Access Door		
5.	Engine Compartment Access Door	9.	460 or 230 Vac Power Receptacle Location

Figure 8: SGSM 2000 — Unit Front View

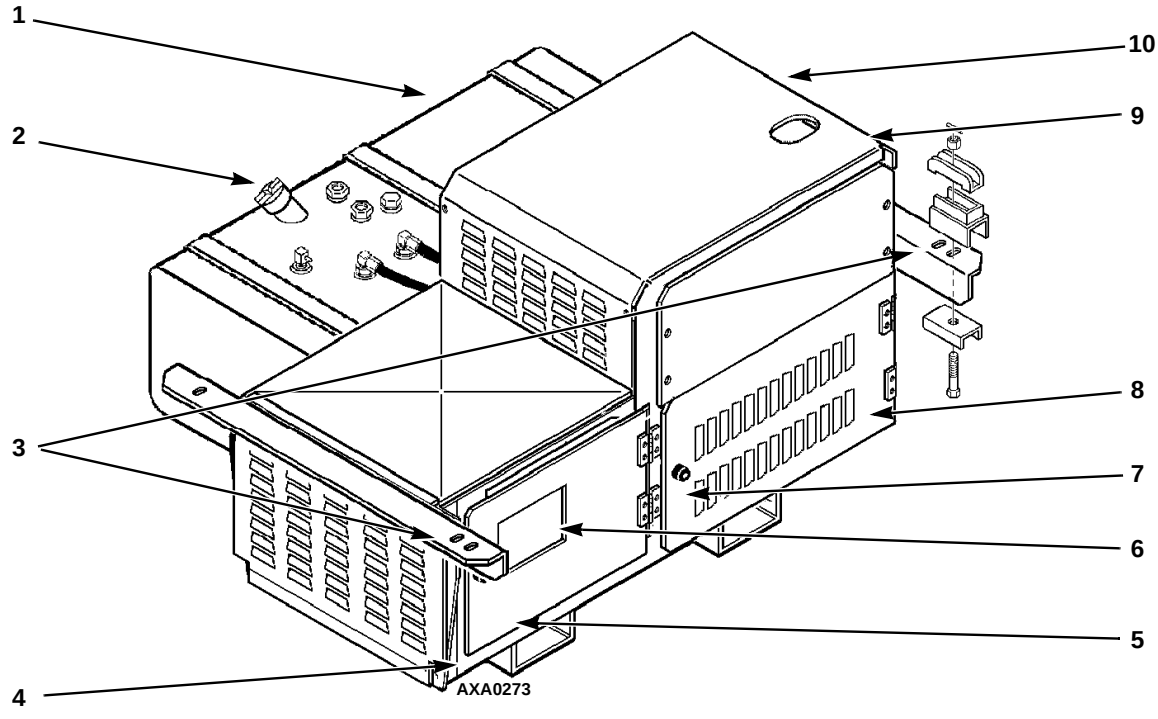

1.	Fuel Tank	7.	Engine Compartment Access Door
2.	Fuel Tank Fill Neck and Cap	8.	Coolant Expansion Tank Location: A “TEXACO ELC” decal tag identifies units built after 2/6/01 that are equipped with the EMI 3000 package and Extended Life Coolant.
3.	Unit Mounting Arms		
4.	Unit Nameplate Location		
5.	Alternator and Control Box Compartment Access Door	9.	460 or 230 Vac Power Receptacle Location
		10.	Radiator Location
6.	Control Box Cover		

Figure 9: SGCM 2000 — Unit Front View

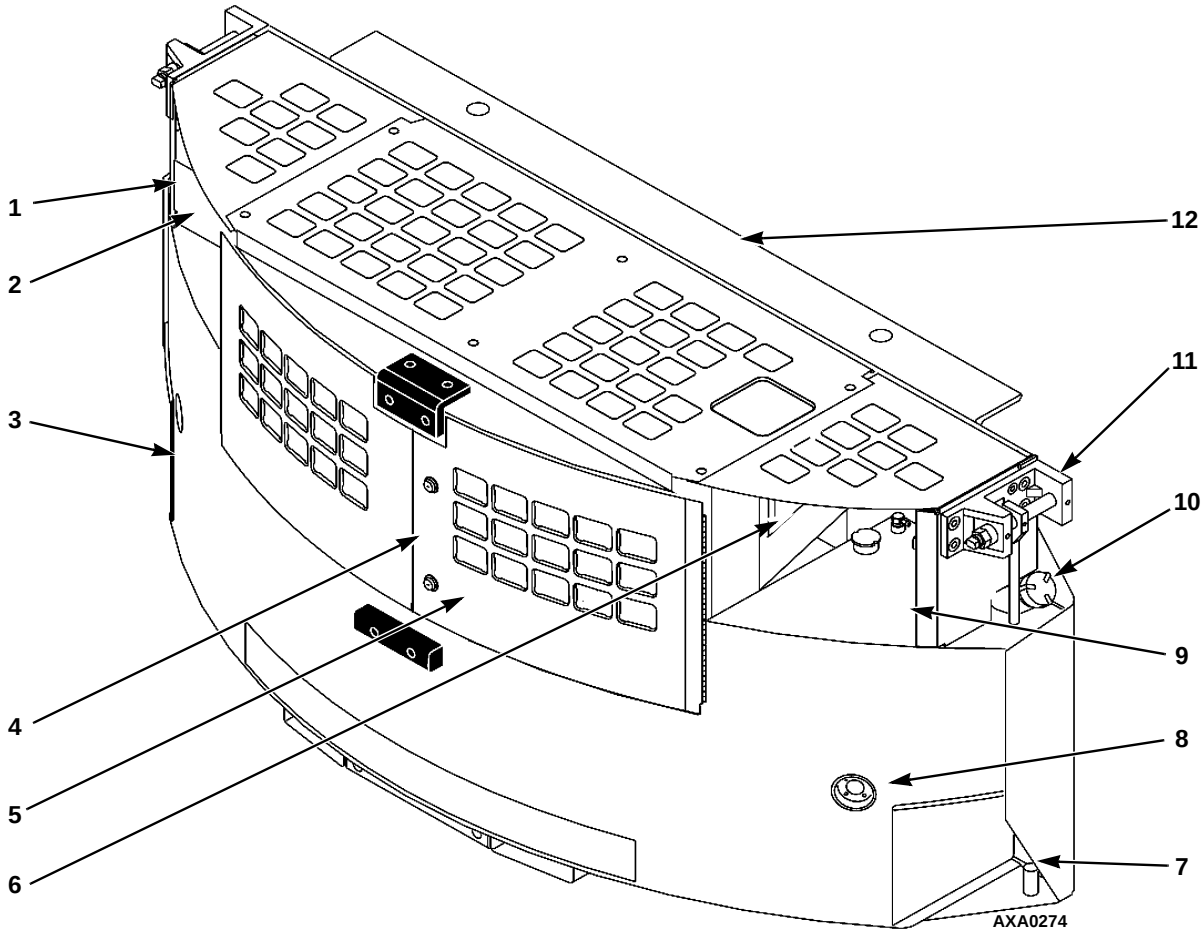

1.	Battery	7.	Lower Mounting Screw and Washer (each side)
2.	Unit Nameplate Location	8.	Fuel Gauge (each side)
3.	Fuel Tank	9.	Control Box Location
4.	Alternator and Engine Compartment Access Doors	10.	Fuel Tank Fill Neck and Cap (each side)
5.	Coolant Expansion Tank Location: A “TEXACO ELC” decal tag identifies units built after 2/6/01 that are equipped with the EMI 3000 package and Extended Life Coolant.	11.	Upper Unit Mounting Clamps (Corner Clamp Equipped Units Only)
6.	460 or 230 Vac Power Receptacle Location	12.	Header Pin Mounting Flange (Header Pin Equipped Units Only)

Figure 10: SGCO 2000 — Unit Front View

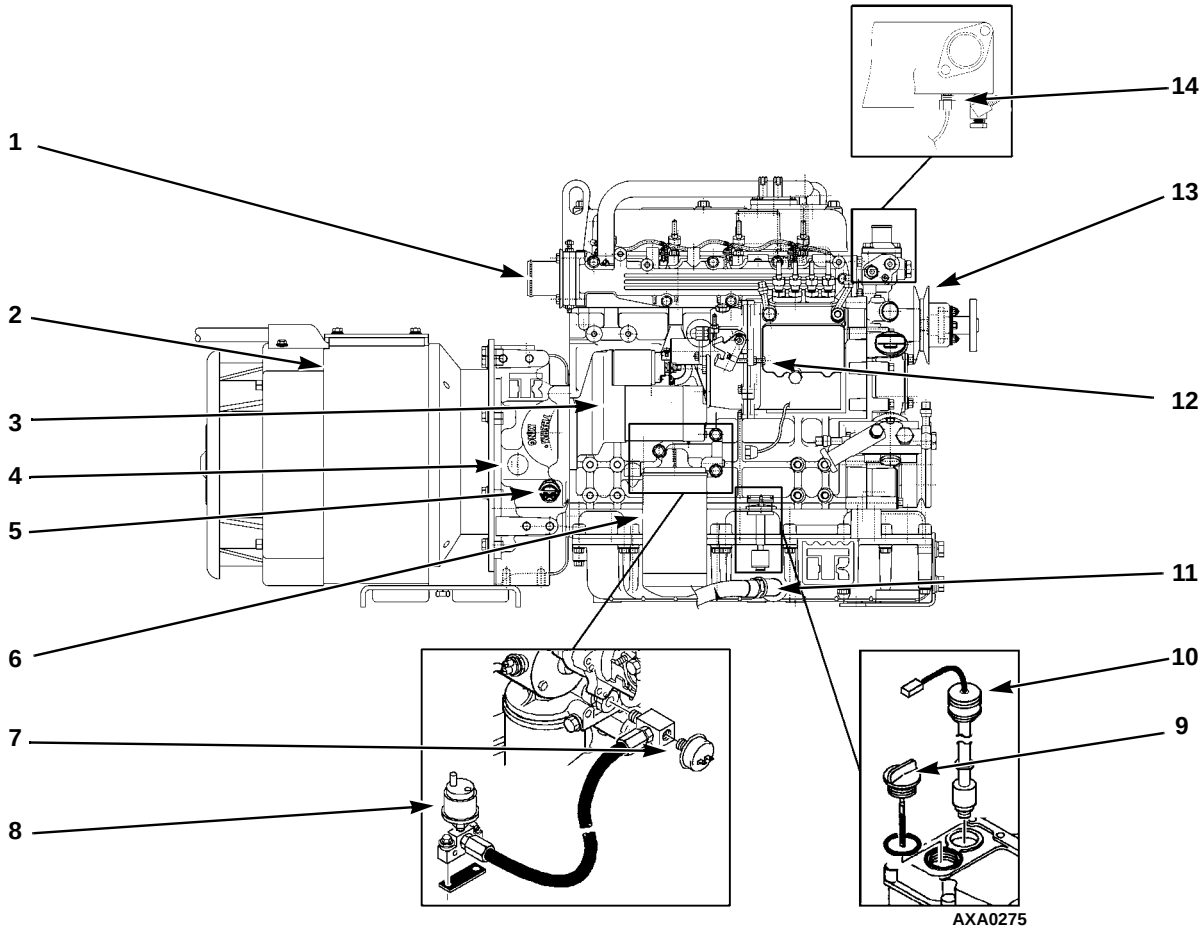

1.	Air Inlet Adapter	8.	Oil Pressure Sensor (Obsolete after software version V0430)
2.	Alternator	9.	Oil Fill and Dipstick
3.	Starter	10.	Oil Level Sensor
4.	Timing Mark Location	11.	Oil Drain Hose
5.	Flywheel Sensor	12.	Engine Speed Adjustment Screw
6.	Oil Filter	13.	Water Pump Pulley
7.	Low Oil Pressure Switch	14.	Water Temperature Sensor

Figure 11: Powerpack (All Models) — Unit Front View

µP-G Microprocessor Description

The µP-G controller is a one-piece, self contained microprocessor for diesel generator sets.

This system automatically controls generator operation by providing:

- Automatic unit preheat and engine startup during initial startup or delayed restart
- Variable air heater preheat time
- Automatic Pretrip Test capability
- Delayed alternator excitation for 15 seconds or until engine coolant temperature increases to 32 C (90 F).
- Unit shutdown protection for the engine and alternator. Controller stops unit due to low engine oil pressure, low engine oil level, high coolant temperature, run relay circuit failure or alternator overload
- Automatic unit restart 20 minutes after unit shutdown due to an unknown condition, high engine water temperature, low engine oil pressure, engine failure to start, check fuel alarm, or alternator overload.

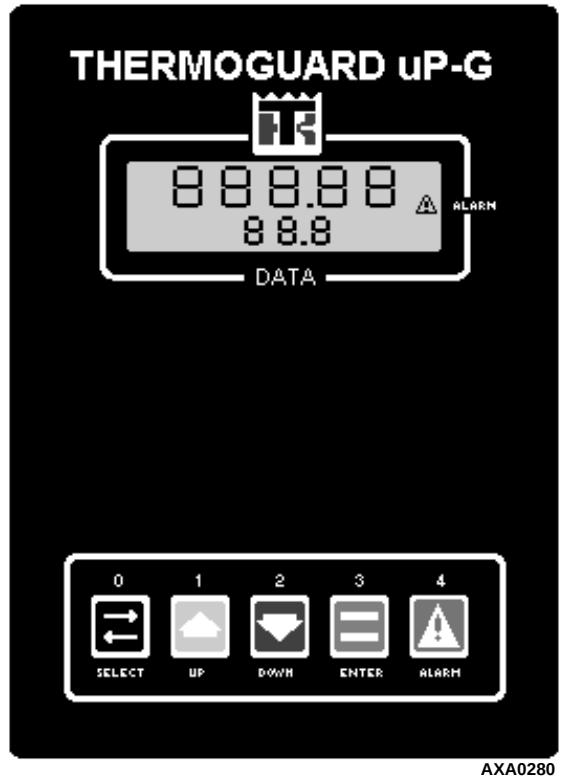

AXA0280

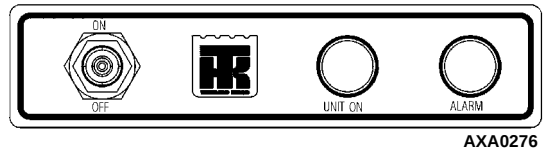

AXA0276

Figure 12: µP-G Microprocessor Controller

Controller Overview

1. Display: A digital display on the front panel shows operating information including output voltage, current test state during a Pretrip test and the controller menu. Normally shows the Output Voltage (This is called the Standard Display). It will be blank when the unit On/Off switch is OFF.

2. Alarm Icon: Appears when the microprocessor has detected an alarm condition.

3. Keypad: Contains the following five keys (See 4-8 below).

4. Select Key: Press this key to enter and display screens from the controller menu.

5. Up Arrow Key: Press this key to scroll UP through the menu display.

6. Down Arrow Key: Press this key to scroll DOWN through the menu display.

7. Enter Key: Press this key to enter or execute controller menu tasks or commands.

8. Alarm Key: Press this key to view the fault code readout in the digital display.

9. Unit On/Off Switch: In the ON position, the electrical control system energizes for unit operation. In the OFF position, the electrical control system including the fuel solenoid de-energizes to stop the engine. The unit will not operate.

10. Unit On LED: This LED flashes On and Off during engine preheat and cranking; and illuminates continuously during unit operation.

11. Alarm LED: This LED illuminates continuously when a shutdown alarm occurs.

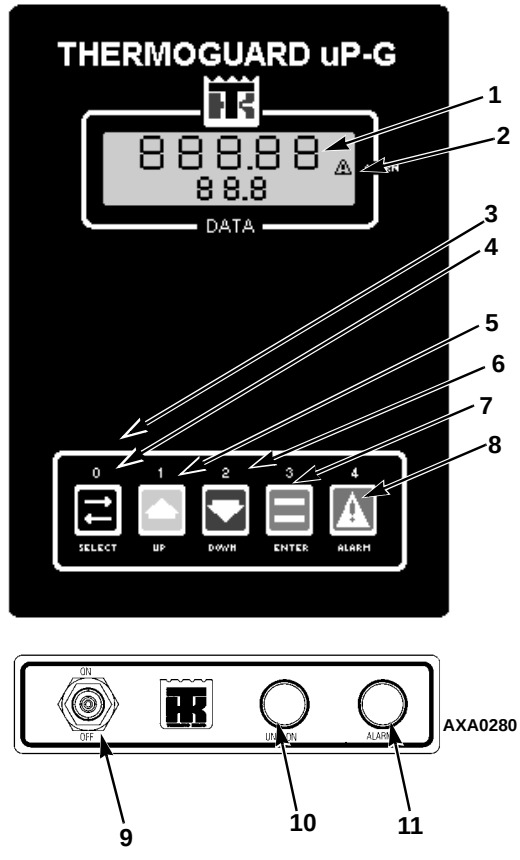

1.	Display
2.	Alarm Icon
3.	Keypad
4.	Select Key
5.	Up Arrow Key
6.	Down Arrow Key
7.	Enter Key
8.	Alarm Key
9.	Unit On/Off Switch
10.	Unit On LED
11.	Alarm LED

Figure 13: Control Box Cover

Miscellaneous Features

- Internal self-checking/diagnostic capability
- Pretrip test capability (see “Pretrip Test” under Pretrip Menu in this chapter)
- Hourmeter: The µP-G controller has a built-in run hourmeter that can be accessed through the View Menu
- Application software version display when **ENTER** key is pressed and held for 3 seconds
- Display menus: The µP-G controller contains an extensive display menu that can be navigated via keypad. The display menu is organized into 5 Main Menus: View Menu, Pretrip Menu, Test Menu, Guard Menu and Program Menu
- Microprocessor Inputs:
    - Run Relay Enabled
    - Engine Oil Level Sensor
    - Engine Oil Pressure Switch
    - Preheat Feedback
    - Coolant Level Sensor
    - Air Filter Switch
    - Excitation Feedback
    - Voltage Regulator
    - Flywheel Sensor
- Microprocessor Outputs:
    - Run Relay
    - Field Relay
    - Start Relay
    - Preheat Relay
    - On Light
    - Alarm Light.

Navigating the Controller Operating Menu

Controller Display Operating Menus

The µP-G controller contains an extensive display menu that can be navigated via the keypad. The Main Menu is organized into five menus (or groups). The groups are as follows:

- View Menu
- Pretrip Menu
- Test Menu
- Guard Menu
- Program Menu

The display shows several information displays in addition to the Main Menu.

- Alarm Menu
- Software Revision Display
- Pause Mode Display

Each area listed above will be described later in this chapter.

A complete listing of the controller menu is located on an 11’ x 17’ fold out in the Wiring and Diagram section in the back of the manual (see last page in the manual). It is designed to be folded out so you can continuously view it as you are learning how to navigate the µP-G Controller Menu. It is recommended to fold this menu out and leave it folded out until you become familiar with the controller menu.

Navigating the Controller Menu

Moving through the menus and their submenus and entering commands requires the use of 4 keys:

Select Key: Press the **SELECT** key to enter or exit the Main menu or a submenu; or to enter a command or value.

Up Key: Press the **UP** key each time you want to scroll up to view another item in a menu or submenu.

Down Key: Press the **DOWN** key each time you want to scroll up or down to view another item in a menu or submenu.

Enter Key: Press the **ENTER** key each time you want to enter a value or load a command.

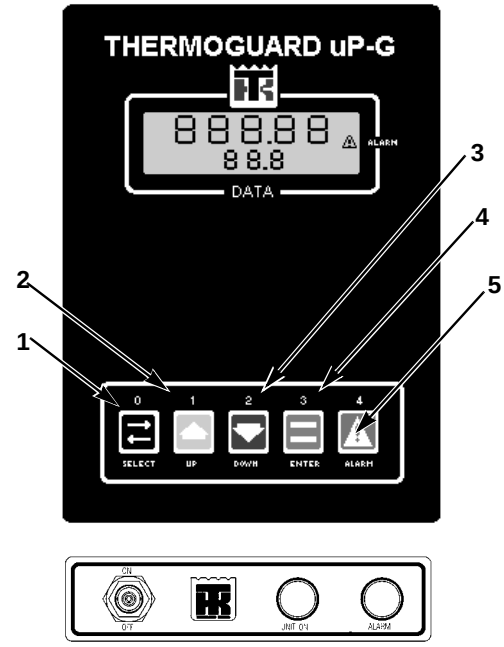

1.	Select Key
2.	Up Key
3.	Down Key
4.	Enter Key
5.	Alarm Key

Figure 14: Controller Display

View Menu

Menu screens in this group are used to display unit operating information including output frequency, engine temperature, oil pressure, engine speed, battery voltage, field current and operating hour information. No changes can be made to the data from the View Menu.

Pretrip Menu

Menu screens in this group are used to activate pretrip tests. See Operating Instructions chapter for detailed instructions.

Test Menu

Menu screens in this group are used to set the unit to activate manual function tests. See Operating Instructions chapter for detailed instructions.

Guarded Access Menu

Menu screens in this group are used to set hourmeters, auto-restart and engine features; and calibrate the controller voltmeter. An access code (0007) is required to enter this menu. See Operating Instructions chapter for detailed instructions.

Program Menu

Menu screens in this group are used to set values including temperature display units (F or C) and oil pressure units (kPa, bar or psi). See Operating Instructions chapter for detailed instructions.

Alarm List Menu

Menu screens in this group display a list of alarm code(s) recorded in the controller memory. Alarm codes are used to simplify unit diagnosis procedures. See Operating Instructions chapter for detailed instructions.

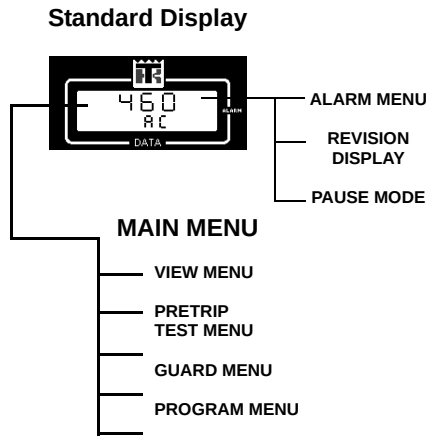

Figure 15: Controller Menu

Software Version Display

The software version is stored in the controller memory. Complete the following steps to display the current software version.

1. Turn unit **ON/OFF** switch to the “ON” position.
2. Return the controller to the Standard Display.

   NOTE: The controller returns to the Standard Display from a Menu screen after 10 seconds, or when the SELECT key is pressed and held for 3 seconds.

3. Press **ENTER** key for 3 seconds. The display shows the software version for 3 seconds (e.g. “0200 / rEv”).

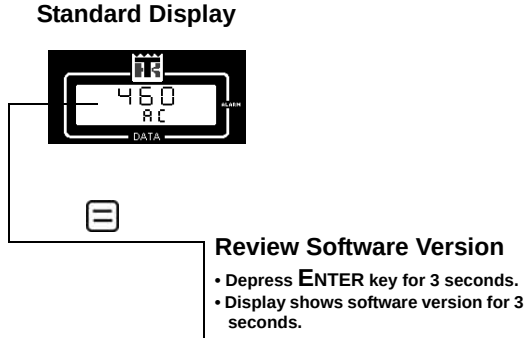

Figure 16: Software Version Display

Pause Mode Displays

WARNING: The AC alternator output or engine may start at any time without notice when the unit is in a PAUSE mode.

A Pause mode display appears when the controller interrupts normal unit operation to perform a check or test.

Pause Condition	Display/Description
AC Output Delay	“dELAy / AC” screen indicates that 460V/230V output is off. Controller activates exciter circuit when engine temperature increases to 32 C (90 F). The Delayed Cold Start feature is set to yES or nO from the Guard menu.
Alarm Shutdown	“PAUSE / run” screen indicates the controller has stopped unit operation due to a shutdown alarm condition. The controller restarts the unit if the alarm condition is corrected. The Pause mode display continues until the shutdown condition has been corrected.

Menu Display Definitions

Acronym	Definitions
AC	Alternating current or Volts A.C. (typically)
AL_01	Alarm 01
rEv	Revision, software (typically)
MEnU	Menu menu or submenu prompt
PtrIP	Pretrip menu or submenu prompt
tESt	Test menu or submenu prompt
GUArd	Guard menu or submenu prompt
PrGrM	Program menu or submenu prompt
vIEW	View menu or submenu prompt
dELAY	Delay
PAUSE	Pause
dEG	Degree
F	Fahrenheit
C	Celsius
OIL	Oil pressure
PSI	Pounds per square inch
bArS	Bars
kPa	Kilo Pascals
HZ	Hertz
Ent	Engine temperature
rPM	Revolutions per minute
bAt	Battery volts D.C.
Fld	Field current D.C. amps
rHr	Run hourmeter
EntEr	Prompt for key stroke
PrE	Pretrip mode
LOAd	Load of data into micro controller
OLS	Oil level switch
OPS	Oil pressure sensor
LOP	Low oil pressure switch
UtS	Water temperature sensor
FUS	Flywheel sensor
Phr	Preheat relay
rr	Run relay
vr	Voltage regulator
Sr	Start relay
Fr	Field relay

Acronym	Definitions
PASS	Pass result after pretrip
FAIL	Fail result during pretrip
CHECh	Check alarm after pretrip
CntrL	Control test menu or submenu
AL	Alarm light
OL	On light
Ht1	Programmable hourmeter #1 threshold
Ht2	Programmable hourmeter #2 threshold
HM1	Programmable hourmeter #1 hours
HM2	Programmable hourmeter #2 hours
EOH	Engine off hours (while rHr is running)
rSL	Restarts since last power up
St	Restarts total for unit
LOPrS	Low oil pressure restart option
dLYSt	Delayed field relay energization option
YAnEn	Yanmar (TK486) Engine

Pretrip Inspection

The pretrip inspection is an important part of the preventive maintenance program. It's designed to head off operating problems and breakdowns before they happen.The Pretrip Inspection is not a substitute for a regularly scheduled maintenance.

Visual Inspection

The following inspections should be made before loading the container or trailer:

Fuel: The diesel fuel supply must be sufficient to guarantee engine operation to the next check point.

Engine Oil: Engine oil level should be at the FULL mark. Never overfill. The dipstick is attached to the filler cap.

Coolant: Engine coolant must be above the ADD mark with antifreeze protection of -34 C (-30 F). Check and add coolant in the expansion tank.

WARNING: DO NOT remove the radiator cap from the radiator fill neck when the engine coolant is hot.

CAUTION: With both Extended Life Coolant (EMI 3000) and Conventional Coolant (non-EMI 3000) equipped units operating in the field, there are several important rules to remember:
• Extended Life Coolant (ELC) is RED in color while conventional coolant is GREEN or BLUE-GREEN.
• Do NOT add "RED" coolant to cooling systems using "GREEN" or "BLUE-GREEN" coolant.
• Do NOT add "GREEN" or "BLUE-GREEN" coolant to cooling systems using "RED" coolant.

Battery: Terminals must be clean. Electrolyte should be at the full mark.

Belt: The water pump belt must be in good condition and adjusted to proper tension.

Electrical: Electrical connections should be securely fastened. Check wires and terminals for corrosion, cracks or moisture. Repair or replace if necessary.

Structural: Visually inspect the unit for leaks, loose or broken parts and other damage. The radiator coil should be clean and free of debris. Clean if necessary. Use an air or water spray jet directed against the coil from the air discharge side.

CAUTION: Air or water spray jet pressure should not be high enough to damage (bend) coil fins.

Mounting Bolts: Check the mounting bolts on the unit and engine. Tighten if necessary.

Starting the Unit

Generator sets are designed to provide power for a refrigeration unit. Before starting the generator set, make sure the refrigeration unit power cord is connected to the generator set electric power receptacle. To operate the refrigeration unit on standby power, disconnect the power cord from the generator set and plug it into the proper power supply.

WARNING: With the unit On/Off switch in the "ON" position, the unit may start at any time without prior warning.

1. Turn unit **ON/OFF** switch to On.
2. The controller automatically energizes the air heater for preheat (if necessary). The preheat buzzer is energized during the preheat period. Preheat time ranges from 5 to 120 seconds, depending on the engine temperature.
3. The engine begins cranking. The air heater and pre-heat buzzer remain energized during the cranking period. The air heater also remains energized for 30 seconds after the engine starts.
4. If the engine RPM does not exceed 50 RPM during the first 4 seconds of cranking, or if the engine does not start after 30 seconds of cranking, the cranking cycle terminates.
5. If the engine fails to start, place the unit switch in the **OFF** position. Determine and correct the cause of the starting failure. Then repeat the starting procedure.

CAUTION: Never use starting fluid.

After Start Inspection

After the engine has started:

1. Listen for abnormal noises.
2. Check engine oil pressure using the View menu of the controller display. Engine oil pressure should read 100 to 380 kPa (1.00 to 3.80 bar) (15 to 55 psig) or more.

NOTE: The engine must operate for approximately 15 seconds before the exciter circuit and battery charging circuits are energized. When Delayed Cold Start feature is set to YES, controller shows "dELAY / AC" screen and the alternator output remains off until the engine temperature increases to 32 C (90 F).

Functional Inspection

To properly perform a Pretrip Test on units equipped with a µP-G controller, do not apply a load to the alternator.

1. Start the unit (see “Starting the Unit” in this chapter).
2. Initiate an automatic Pretrip Test.

   NOTE: Correct all existing alarm conditions and clear the alarm codes before performing a Pretrip test.

   a. Press the **SELECT** key to enter Main Menu.

   b. Press the **UP** or **DOWN** key to scroll up or down in menu to “PtrlP”.

   c. Press the **SELECT** key to activate the Pretrip Test function. Flashing display will show “EntEr / PrE”.

   d. Press the **ENTER** key to start the Pretrip Test. Flashing display will show “LOAd / PrE”.
3. The controller then performs the Pretrip Test. Observe the unit for proper operation and functions during pretrip test.

   a. Controller LED display turns On and then Off.

   b. LED display shows the controller input or output circuit being tested.

   c. When the controller display reaches “Phr” (preheat relay test), the controller preheats and restarts the engine.

Display Message	Pretrip Test Performed
88888 / 88	Display Test
OLS / PrE	Oil Level Switch Test
OPS / PrE	Oil Pressure Sensor Test
LOP / PrE	Oil Pressure Switch Test
UtS / PrE	Coolant Temperature Test
FUS / PrE	RPM Sensor Test
Phr / PrE	Preheat Relay Test
rr / PrE	Run Relay Test
vr / PrE	Volt Regulator Test
Sr / PrE	Start Relay Test
Fr / PrE	Field Relay Test
OPS / PrE	Oil Pressure Sensor Test
LOP / PrE	Oil Pressure Switch Test
rPN / PrE	RPM Sensor Test
AC / PrE	Output Volts Test

   d. When the Pretrip Test is complete, the test ends automatically and the controller display shows “PASS” or “FAIL”.

   e. If an operating problem occurs during the Pretrip Test, the Alarm icon will turn On and flash. View and correct any alarm conditions. Then clear the alarms and repeat the Pretrip Test.

   NOTE: Clear the alarm codes ONLY after the alarm codes are documented and problems repaired.
4. Press the **ENTER** key on the controller to return the unit to normal operation.

View Menu

NOTE: The View Menu only displays information, items can NOT be changed.

The View Menu displays general unit operating information including electrical data, temperatures, etc.

To enter the View Menu complete the following steps:

5. Place the **ON/OFF** switch in the “ON” position.
6. Return to the Standard Display. (voltage output)

   NOTE: The controller automatically returns to the Standard Display from a Menu screen after about 10 seconds, or when the SELECT key is pressed and held for 3 seconds.

7. Press **SELECT** key to enter the menu list. Display shows “MEnU / ---”.
8. Press **DOWN** key to scroll to “VIEW” in display.
9. Press **SELECT** key to access the View menu. Display shows “VIEW / ---”.
10. Press **DOWN** key to view items in the View menu list. The display shows the value for the following functions:
    - Output Frequency (HZ)
    - Engine Temperature (Ent)
    - Oil Pressure (OIL), starting with V0430 software version display shows oH or oL for high or low oil pressure)
    - Engine Speed (rPM)
    - Battery Volts (bAT)
    - Field Current (Fld)
    - Run Hours (rHr).

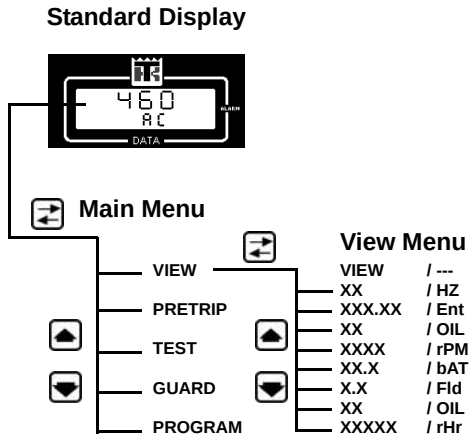

Figure 17: View Menu Screen Flow Diagram

NOTE: Press the ENTER key to lock a View screen in the LCD display. A decimal point flashes in the bottom display to indicate the screen is locked. The screen remains locked for 15 minutes. Press any key to unlock the display.

NOTE: The controller automatically returns to the Standard Display from a Menu screen after about 10 seconds, or when the SELECT key is pressed and held for 3 seconds.

Pretrip Menu

NOTE: The controller will not perform an automatic pretrip test until all alarms have been corrected and cleared.

The Pretrip menu initiates a test of the unit's electrical, engine and alternator system components. To enter the pretrip menu complete the following steps:

1. Place the **ON/OFF** switch in the "ON" position.
2. Return to the standard display (voltage output)

   NOTE: The controller automatically returns to the Standard Display from a Menu screen after 10 seconds, or when the SELECT key is pressed and held for 3 seconds.

3. Press **SELECT** key to enter the menu list. Display shows "MEnU / ---".
4. Press **DOWN** key to scroll to "PtrlP" in display.
5. Press **SELECT** key to access the Pretrip menu. Flashing display shows "EntEr / PrE".
6. Press **ENTER** key to start an automatic Pretrip test. Display briefly shows "LOAd / PrE". The controller then displays the following screens as the Pretrip test is performed.

Display Screen	Pretrip Test
88888 / 88	Display Test
OLS / PrE	Oil Level Switch Test
OPS / PrE	Oil Pressure Sensor Test
LOP / PrE	Oil Pressure Switch Test
UtS / PrE	Coolant Temperature Test
FUS / PrE	RPM Sensor Test
Phr / PrE	Preheat Relay Test
rr / PrE	Run Relay Test
vr / PrE	Volt Regulator Test
Sr / PrE	Start Relay Test
Fr / PrE	Field Relay Test
OPS / PrE	Oil Pressure Sensor Test
LOP / PrE	Oil Pressure Switch Test
rPN / PrE	RPM Sensor Test
AC / PrE	Output Volts Test

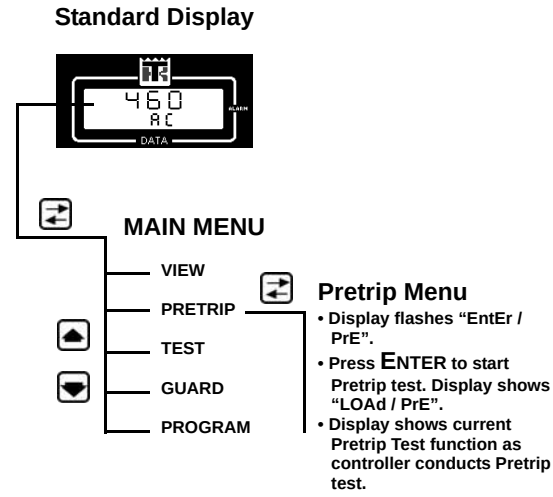

Figure 18: Pretrip Menu Screen Flow Diagram

7. When pretrip test is complete, displays shows PASS or FAIL. Press the **ENTER** key to clear the pretrip message display and return to standard screen. View and correct any alarm codes recorded before placing unit in service.

Test Menu

The Test Menu allows a technician to perform specific diagnostic tests on the unit.

NOTE: The controller STOPS the unit when the Test Menu is entered. A technician can then select the control circuit or component to be tested/checked from the Test submenu.

WARNING: The unit may restart at any time without prior warning. If no key is pressed for 30 seconds and all test outputs are Off in the Test submenu.

To enter the test menu complete the following steps:

1. Place the **ON/OFF** switch in the "ON" position.
2. Return to the Standard Display (voltage output).

   NOTE: The controller automatically returns to the Standard Display from a Menu screen after about 10 seconds, or when the SELECT key is pressed and held for 3 seconds.
3. Press **SELECT** key to enter the menu list. Display shows "MEnU / ---".
4. Press **DOWN** key to scroll to "tESt" in the display.
5. Press **SELECT** key to access the Test menu. Display shows "tESt / ---".
6. Press **DOWN** key to scroll to "CntrL" in the display.
7. Press **SELECT** key to access the Control Test submenu. Display shows "CntrL / ---".
8. Press **DOWN** key to scroll to desired test. The controller displays the following test functions:

Display Screen	Test
AL / 0 l	Alarm Light Test
OL / 0 l	On Light Test
PHr / 0 l	Preheat Relay Test
rr / 0 l	Run Relay Test
Sr / 0 l	Start Relay Test
Fr / 0 l	Field Relay Test

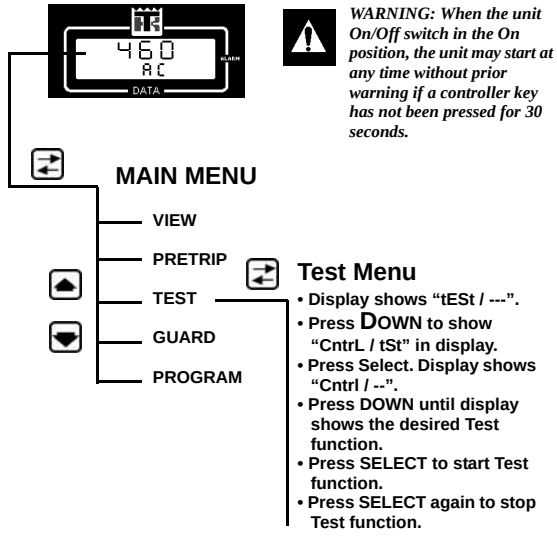

Figure 19: Test Menu Screen Flow Diagram

9. A flashing "l" in the display indicates the test output is Off. A flashing "0" in the display indicates the test output is On.
10. Press the **SELECT** key to activate the test. The flashing "l" in the lower display changes to a flashing "0" when the test output is turned On.
11. Press the **SELECT** key to stop the test. When the check/diagnosis of the selected circuit is complete, the flashing "0" in the lower display changes to a flashing "1" when the test output is turned Off.
12. Complete all desired tests.
13. Wait 30 seconds for the controller to exit the Test submenu and return to the Standard Display. The controller then automatically restarts the unit.

WARNING: With the unit On/Off switch in the "ON" position, the unit may start at any time without prior warning if a controller key has not been pressed for 30 seconds.

Guard Menu

The Guard Menu is used to view and set many programmable features including:

- Run Hourmeter (View Only)
- Hourmeter 1
- Hourmeter 2
- Engine Off Hourmeter (View Only)
- Restarts after Power up (View Only)
- Unit Restarts
- Low Oil Pressure Restart
- Delayed Cold Start
- Voltmeter Calibration.

NOTE: An access code is required to enter the Guard menu. This prevents unauthorized personnel from tampering with the programmable features.

Navigating Menu Guard Screens

14. Place the **ON/OFF** switch in the "ON" position.
15. Return to the Standard Display (voltage output).

    NOTE: The controller automatically returns to the Standard Display from a Menu screen after about 10 seconds, or when the SELECT key is pressed and held for 3 seconds.

16. Press **SELECT** key to enter the menu list. Display shows "MEnU / ---".
17. Press **DOWN** key to scroll to "GUArd" in the display.
18. Press **SELECT** key to access the Guard menu. Display shows "0000 / GUA" with left "0" flashing. A flashing digit indicates the digit that can be changed.
19. Enter the current access code "0007".
    a. Press and release the **SELECT** key three times to scroll the flashing digit ("0") to the right digit.
    b. Press and release the **DOWN** key three times to scroll the flashing digit to "7" (display now shows "0007 / GUA").
    c. Press the **ENTER** key to load the code and access the Guard menu. The display will show "GUArd / ---".

    NOTE: If the correct code is not entered, the display returns to "GUArd".

20. Press the **DOWN** or **UP** key to scroll through the menu list.

NOTE: If a new controller or new software has been installed, proceed immediately to "Voltmeter Calibration" in this chapter.

NOTE: If no key is pressed, the controller returns to the "GUArd / ---" display from a Guard Menu screen after 30 seconds.

Setting the User Hourmeter Thresholds and User Hours

NOTE: The procedure for setting the threshold and countdown hours for Hourmeter 1 and Hourmeter 2 are the same.

The User Hourmeter feature sets the controller to alert the user that unit has operated for a defined number of hours. The number of operating hours are entered in the controller in the Hourmeter Threshold display. The controller then generates a Check alarm when the user hourmeter reaches the threshold setting.

NOTE: If the user does not desire to use the User Hourmeter feature to measure maintenance intervals, etc., leave the settings at "0000" to avoid nuisance alarms. On units equipped with version "0200" software, the controller will reset the User Hourmeters automatically when an hourmeter threshold alarm is cleared.

The steps are as follows:

1. From "GUArd / ---" in the Guard menu, press the DOWN key until the display shows "XXXXX / Ht1" (where "XXXXX" is the threshold setting and "Ht1" is Hourmeter Threshold 1).
    a. Press the **SELECT** key to enter the load User Hourmeter Threshold display. Bottom display flashes "Ht1".
    b. Press the **UP** or **DOWN** key to choose the desired threshold setting.

c. Press the **Enter** key when the desired threshold hours show in the top display. The display flashes “LOAd” and then shows “XXXXX / Ht1” (where “XXXXX” is the new threshold hours).

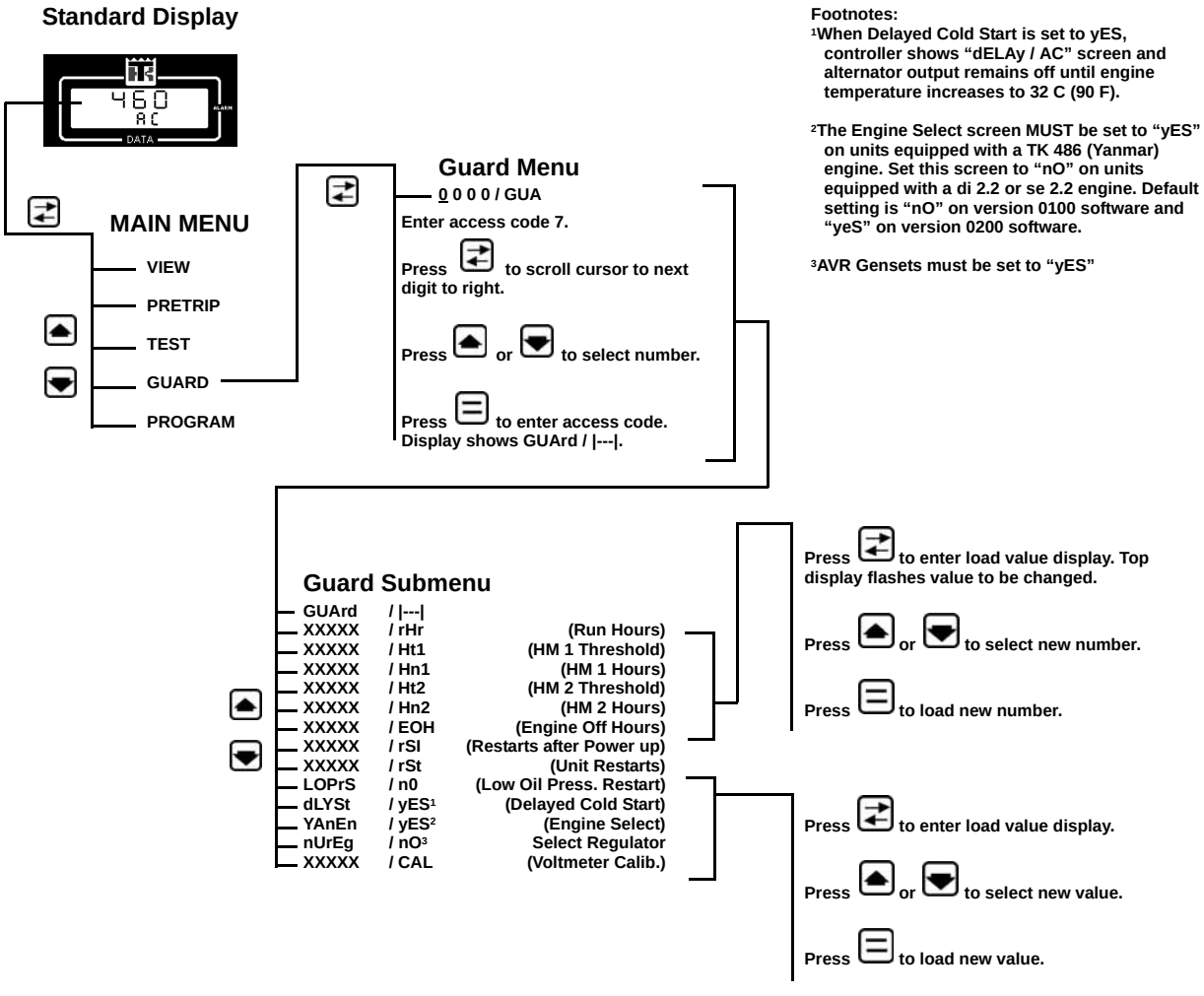

Figure 20: Guard Menu Screen Flow Diagram

2. Press the **Down** key until the display shows “XXXXX / Hn1” (where “XXXXX” is the number of accumulated user hours and “Hn1” is Hourmeter 1).

   NOTE: leave this setting “00000” if a new controller is being installed in the unit and the number of accumulated run hours can not be determined.

   a. Press the **Select** key to enter the load User Hourmeter display. Bottom display flashes “Hn1”.

   b. Press the **Up** or **Down** key to choose the desired hour setting.

   c. Press the **Enter** key when the desired hours show in the top display. The display flashes “LOAd” and then shows “XXXXX / Hn1” (where “XXXXX” is the new accumulated user hours).

Setting Unit Restarts

The Unit Restart feature sets the number of times the controller will attempt to restart the unit after unit operation stops due to an auto shutdown condition.

NOTE: Leave this setting "00000" to have the controller attempt to restart the unit until the unit has been successfully restarted or until a code 61 is generated due to a low battery.

1. From "GUArd / ---" in the Guard menu, press the **Down** key until the display shows "XXXXX / rSt" (where "XXXXX" is the number of restart attempts).
2. Press the **Select** key to enter the load Unit Restart display. Bottom display flashes "rSt".
3. Press the **Up** or **Down** key to choose the desired restart attempt setting.
4. Press the **Enter** key when the desired restart attempt setting shows in the top display. The display flashes "LOAd" and then shows "XXXXX / rSt" (where "XXXXX" is the new restart attempt setting).

Setting Low Oil Pressure Restart

The Low Oil Pressure Restart feature sets the controller to restart the unit after unit operation stops due to a low oil pressure condition. Factory default setting is "n0".

1. From "GUArd / ---" in the Guard menu, press the **Down** key until the display shows "LOPrS / n0" (where "n0" means the feature is off).
2. Press the **Select** key to enter the load Low Oil Pressure Restart display. Bottom display flashes "n0".
3. Press the **Up** or **Down** key to choose the desired restart attempt setting:
   - n0 = inactive or off.
   - yES = active or on.
4. Press the **Enter** key when the desired restart attempt setting shows in the bottom display. The display flashes "LOAd" and then shows "LOPrS / XXX" (where "XXX" is the new low oil pressure restart attempt setting).

Setting Delayed Cold Start

The Delayed Cold Start feature sets the controller to delay alternator excitation until the engine water temperature increases to 32 C (90 F). Factory default setting is "yES".

1. From "GUArd / ---" in the Guard menu, press the **Down** key until the display shows "dLYSt / n0" (where "n0" means the feature is off).
2. Press the **Select** key to enter the load Delayed Cold Start display. Bottom display flashes "n0".
3. Press the **Up** or **Down** key to choose the desired restart attempt setting:
   - n0 = inactive or off.
   - yES = active or on.
4. Press the **Enter** key when the desired restart attempt setting shows in the bottom display. The display flashes "LOAd" and then shows "dLYSt / XXX" (where "XXX" is the new delayed cold start setting).

Selecting Engine Type

The Engine Select feature sets the controller to the Yanmar (TK 486) engine. The Engine Select screen must be set to "YES" on units equipped with a TK 486 engine. Default setting is "YES" on version 0200 software and "nO" on version 0100 software.

1. From "GUArd / ---" in the Guard menu, press the **Down** key until the display shows "YAnEN / YES" (where "YES" means the feature is set for a TK 486 engine).
2. Press the **Select** key to enter the load Engine Select display. Bottom display flashes "YES".
3. Press the **Up** or **Down** key to choose the desired engine type setting:
   - n0 = di 2.2 or se 2.2 engine.
   - YES = TK 486 (Yanmar) engine.
4. Press the **Enter** key when the desired engine setting shows in the bottom display,. The display flashes "LOAd" and then shows "YAnEN / XXX" (where "XXX" is the new setting).

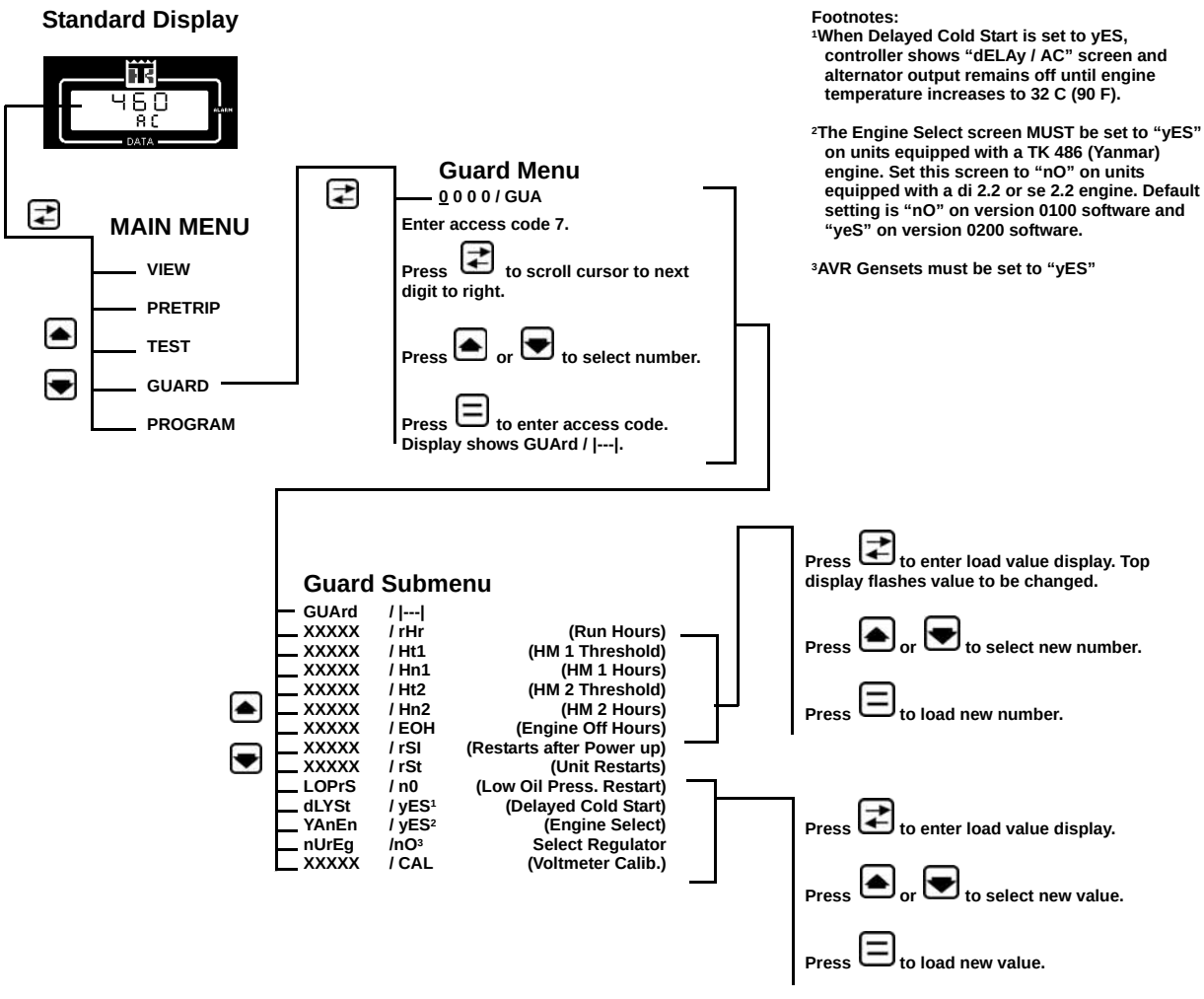

Figure 21: Guard Menu Screen Flow Diagram

Selecting Regulator Type

The Regulator Select feature sets the controller to the Newage AVR regulator. The Engine Select screen must be set to “YES” on units equipped with an AVR regulator. Factory default setting is “YES” units with AVR regulator. However, default setting on replacement software is “nO”.

1. From “GUArd / ---” in the Guard menu, press the DOWN key until the display shows “nUrEG / YES” (where “YES” means the feature is set for a AVR regulator).
2. Press the SELECT key to enter the load Engine Select display. Bottom display flashes “YES”.
3. Press the UP or DOWN key to choose the desired engine type setting:
   - n0 = Standard Thermo King exciter.
   - YES = Newage AVR regulator.
4. When the desired engine setting shows in the bottom display, press the ENTER key. The display flashes “LOAd” and then shows “YAnEN / XXX” (where “XXX” is the new setting).

Voltmeter Calibration

The Voltmeter Calibration feature calibrates the controller to the alternator output. The controller voltmeter should be calibrated whenever a new controller is installed in the unit or when the controller is suspected of displaying inaccurate readings.

1. Turn the unit **ON/OFF** switch Off to stop unit.
2. Disconnect the refrigeration unit from the generator.
3. Turn the unit **ON/OFF** switch to the “ON” position. This will restart the unit.
4. Check the output voltage at the genset plug. Check the voltage between the three phases. All three phases should be within 3 percent of each other.
5. Determine the average voltage reading between the three phases.
6. From “GUArd / ---” in the Guard menu, press the **DOWN** key until the display shows “XXXXX / CAL” (where “XXXXX” is the current voltage reading).
7. Press the **SELECT** key to enter the load Voltmeter Calibration display. Bottom display flashes “CAL”.
8. Press the **UP** or **DOWN** key to adjust the top display reading to the average voltage reading determined in Step 1.
9. Press the **ENTER** key when the correct voltage reading shows in the top display. The display flashes “LOAd” and then shows “XXX / CAL” (where “XXX” is the new voltage reading).

Program Menu

The Program Menu is used to set display values for temperature and oil pressure units.

Complete the following steps to enter the program menu:

1. Place the **ON/OFF** switch in the “ON” position.
2. Return to the Standard Display. (voltage output)

   NOTE: The controller automatically returns to the Standard Display from a Menu screen after about 10 seconds, or when the SELECT key is pressed and held for 3 seconds.
3. Press the **SELECT** key to enter the menu list. Display shows “MEnU / ---”.
4. Press the **DOWN** key to scroll to “PrGm” in display.
5. Press the **SELECT** key to access the Program menu. Display shows “PrGm / ---”.
6. Press the **DOWN** key and scroll to the desired function:

Display Screen	Program Function
X / dEG	Set degrees F or C
XXXX / OIL	Set oil pressure units in PSI, BARS or kPA

7. Press the **SELECT KEY** to activate the program function. The upper display begins flashing (e.g. “F” flashes).
8. Press the **DOWN** key to scroll to the desired value.
9. Press the **ENTER** key with the new value in the display, to load the value in the controller memory. Display will show “LOAd” and then return to display the new value and function (e.g. “C / dEG”).
10. When all new values are set, wait 30 seconds for the controller to exit the Program submenu and return to the Standard Display.

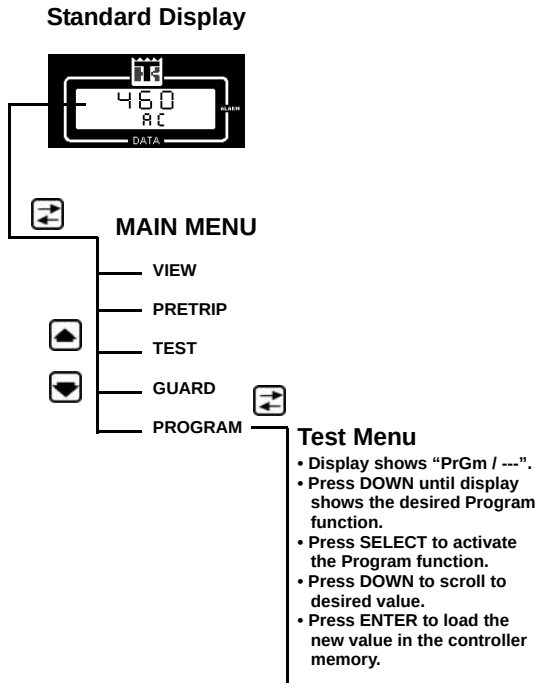

Figure 22: Program Menu Screen Flow Diagram

Alarm List Menu

The Alarm List menu displays alarm codes. Alarm codes are recorded in the controller memory to simplify unit diagnosis procedures. The first 16 fault codes including the most recent fault code are retained by the controller in a non-volatile memory in order of their occurrence (see codes, alarm type and alarm description below). If the Alarm LED is “ON” or flashing, enter the ALARM LIST to view the alarm code(s).

Some alarm codes are only recorded during a Pretrip Test. Alarm codes that are recorded during an automatic Pretrip Test are recorded in the controller memory and displayed with a hyphen (-) preceding the alarm code.

Alarm Types

There are three types of alarms:

Shutdown Alarm: Alarm LED flashes and unit stops. Shutdown alarms indicate the unit has been stopped to prevent damage to the unit. The condition must be corrected before restarting the unit. Alarm codes 17-20, 25, 44, 51, 61, 66 and 74 are shutdown alarms.

Check Alarm: Alarm LED remains On until alarm is cleared. Check alarms indicate corrective action should be taken before a problem becomes severe. Alarm codes 06, 07, 15 to 17, 19-31, 37-43, 45, 46, 61-63, 69-72 and 99 are Check alarms.

Log Alarm: Alarm is recorded in controller memory only. Alarm LED does not flash or turn on. Alarm codes 15, 61, and 88 are Log alarms.

Displaying and Clearing Alarm Codes

If the Alarm LED is On or flashing On and Off, use the ALARM key to view the alarm code(s). To display alarm code complete the following steps:

1. Place the ON/OFF switch in the “ON” position.
2. Return to the Standard Display.

   NOTE: The controller automatically returns to the Standard Display from a Menu screen after 10 seconds, or when the SELECT key is pressed and held for 3 seconds.

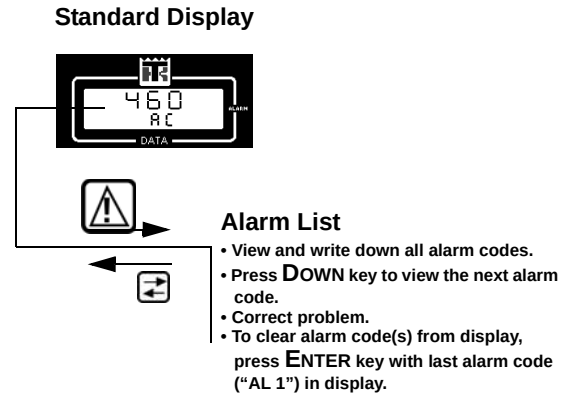

Figure 23: Alarm List Screen Flow Diagram

3. Press the ALARM key.
   - The top display shows the number of alarms stored in memory (e.g. “AL 2”).
   - The bottom display shows a two digit code for the most recent alarm (e.g. “31”).
4. Write down the first alarm code.
5. Press the DOWN key to view the next alarm code.
6. Repeat step 2 until all alarm codes have been recorded.
7. After the last alarm code (“AL 1”) has been viewed and recorded, the top display flashes “ENTER” (the code number of the last alarm still appears in the bottom display).

NOTE: Clear the Alarm codes ONLY after the alarm codes are documented and problems repaired. Clearing the codes erases them from the controller Alarm display memory.

NOTE: The controller will default (return) to the Standard Display if the ENTER key is not pressed within 10 seconds.

To clear the alarm codes complete the following steps:

1. Press the ENTER key to clear all alarm codes from the current display memory. The display briefly shows “ALARM CLR”.
2. The controller then returns to the Standard Display.

WARNING: Some unit malfunctions will cause an Alarm and unit shutdown condition. When the alarm codes are cleared, the unit will start automatically.

µP-G Alarm Codes, Type and Description

Shutdown Alarm (Level 1 Alarm): The Alarm icon appears in controller display, the Alarm LED turns On and the unit stops. Correct the alarm condition and acknowledge the alarm before restarting the unit.

Check Alarm (Level 2 Alarm): The Alarm icon appears in display until the alarm is acknowledged and cleared.

NOTE: The phrase "restart after 20 minutes" refers to the auto-restart mode. This is where the unit will make up to three attempts every 20 minutes to restart the unit after a shutdown has occurred. This restart mode continues until the unit has been successfully restarted or until an Alarm Code 61 is generated due to a low battery.

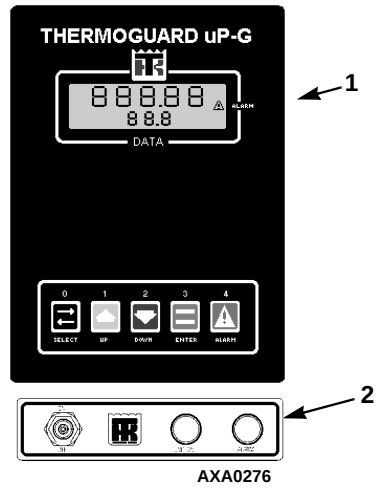

1.	Alarm Icon
2.	Alarm LED

Figure 24: Alarm Indicators

Alarm Codes List

Alarm Code	Type	Cause or Explanation

*06	Check	**Water Temperature Sensor Failure**
		• Check alarm is generated if:
		  • Water temperature is out of range for 2 seconds: Below -40 C (-40 F) or above 130 C (266 F)
		  • Sensor or circuit is open or shorted
		***Pretrip:**
		• Check alarm is generated if the fault conditions above occur during a pretrip test.

*07	Check	**Engine RPM Sensor**
		• Check alarm is generated if:
		  • Engine cranks; RPM is below 40 during cranking, but oil pressure was above 35 kPa, 0.35 bar, 5 psig for 7 seconds after the starter de-energized
		  • Engine cranks; RPM is above 40 but below 800, and oil pressure is above 35 kPa, 0.35 bar, 5 psig for 37 seconds
		  • Engine has started but RPM is below 800 for 60 seconds
		***Pretrip:**
		• During Pretrip test, a Check alarm is generated if:
		  • RPM sensor showed RPMs when the engine was not running
		  • RPM sensor did NOT show RPMs when the engine should have been running

15	Check	**Preheat Circuit Check**
		• Check alarm is generated if:
		  • Preheat relay output is energized during cranking, but the preheat digital input is low for 2 seconds, log alarm is recorded.
		  • Preheat output is energized during cranking and the battery volts are less than 9.0 Volts for 3 seconds, a log alarm is recorded. The unit will attempt to start without the preheat if this occurs.

16	Check	**Digital Input Failure** • Check alarm is generated if: • Digital inputs have been changing once a second for the last 10 seconds. This condition indicates noise on the line, a loose connection, or a bad sensor.

17	Check/Shutdown	**Engine Failed to Crank**
		• Check alarm is generated if:
		  • Engine does not crank: RPM is below 40 for 3 seconds after starter is energized and oil pressure is below 35 kPa, 0.35 bar, 5 psig for 7 seconds after starter is de-energized
		  • The unit will try to start 2 more times.
		• Shutdown alarm is generated if:
		  • Engine fails to start after the 3rd attempt

Alarm Codes List

Alarm Code	Type	Cause or Explanation

18	Check	**High Engine Water Temperature**
		• Check alarm is generated if:
		  • Engine is On and water temperature is above 107 C (225 F) for 25 seconds
		  • Engine then stops until water temperature decreases to 88 C (190 F). Engine then attempts to restart

*19	Check/Shutdown	**Low Engine Oil Pressure**
		• Check alarm is generated if:
		  • Engine is On; oil level indicates normal; and oil pressure is below 104 kPa, 1.04 bar, 15 psig at water temperatures above 10 C (50 F) for 30 seconds, or oil pressure does NOT increase 35 kPa, 0.35 bar, 5 psig at water temperatures below 10 C (50 F) for 30 seconds
		  • Unit will attempt to restart after 20 minutes if programmable Low Oil Pressure Restart feature is set to Yes (ON)
		• Shutdown alarm is generated if:
		  • The fault conditions above occur and the programmable Low Oil Pressure Restart feature is set to nO (OFF)
		*Pretrip: Alarms are generated during the pretrip test if the fault conditions above occur.

20	Check	**Engine Failed To Start**
		• Check alarm is generated if:
		  • Engine cranks; RPM is above 40, but below 800 for 30 seconds and oil pressure was not above 35 kPa, 0.35 bar, 5 psig for 7 seconds after starter de-energized
		  • The unit will try to start 2 more times
		  • If engine fails to start after the 3rd attempt, it will try to restart after 20 minutes.

*25	Check/Shutdown	**Low Output Voltage**
		• Check alarm is generated if:
		  • Engine is On; field relay is energized but the output voltage is below 180 Vac for 30 seconds
		***Pretrip:**
		• Shutdown alarm is generated if:
		  • The field relay is energized during the pretrip test and the output voltage is below 200 Vac

Alarm Codes List

Alarm Code	Type	Cause or Explanation

*31	Check/Shutdown
	(This check alarm has been deleted starting with software version V0430)
		Oil Pressure Sensor
		• A Check alarm is generated if:
		  • Engine is Off and oil pressure is above 69 kPa, 0.69 bar, 10 psig for 2 seconds; or the low oil pressure switch indicates oil pressure (opens) for 10 seconds
		  • Engine is On and oil pressure is above 2070 kPa, 20.70 bar, 300 psig
		  • Engine is On; the low oil pressure switch indicates oil pressure (opens); the oil level switch indicates normal (open); but the oil pressure is below 15 psig at water temperatures above 100 C (212 F), or the oil pressure has not increased by 35 kPa, 0.35 bar, 5 psig at water temperatures below 100 C (212 F)
		***Pretrip:**
		• During Pretrip test, a Check alarm is generated if:
		  • Engine is Off and oil pressure is above 69 kPa, 0.69 bar, 10 psig
		  • Engine is On and oil pressure is below 35 kPa, 0.35 bar, 5 psig
		  • Engine is On; the low oil pressure switch indicates no oil pressure (closed); and the controller has not recorded a previous Oil Pressure Sensor Check alarm
		• A Shutdown alarm is generated if:
		  • Engine is Off; the low oil pressure switch indicates oil pressure (open); and the controller has already generated a Oil Pressure Sensor Check alarm
		  • Engine is On; the low oil pressure switch indicates no oil pressure (closed); and the controller has already generated a Oil Pressure Sensor Check alarm

*35	Check	**Run Relay Circuit**
		• A Shutdown alarm is generated if:
		  • During cranking: Run relay digital feedback is low after energizing during cranking. Controller attempts to energize run relay and obtain high digital feedback 3 times before generating alarm
		  • During running: The run relay output does not match the run relay digital feed-back input for 4 seconds
		***Pretrip:**
		• A Shutdown alarm is generated if:
		  • Run relay digital feedback input is low after 3 seconds during the pretrip test

*37	Check	**Coolant Level Alarm**
		• Check alarm is generated if:
		  • Engine is Off and the coolant level sensor indicates low coolant for 30 seconds
		***Pretrip:**
		• Check alarm is generated if:
		  • During the Engine Off portion of the pretrip test, the coolant level sensor indicates low coolant for 3 seconds

Alarm Codes List

Alarm Code	Type	Cause or Explanation
41	Check	**Engine Water Temperature Check** • Check alarm is generated if: • Engine is On and water temperature is above 102 C (215 F) for 2 minutes
43	Check	**Frequency Out of Range-Low** • Check alarm is generated if: • Engine is On and engine RPMs are above 800 but below 1350 for 10 seconds

44	Check	**Fuel System Check**
		• Check alarm is generated if:
		  • Engine is On and engine RPMs are below 1050 and have stayed below 1075 for 80 seconds
		  • The engine stops and will then attempt to restart after 20 minutes

45	Check	**Frequency Out of Range-High** • Check alarm is generated if: • Engine is On and engine RPMs are above 2100 for 10 seconds
46	Check	**Check Air Filter** • Check alarm is generated if: • Engine is On and the air filter digital input is low for 10 seconds

51	Check	**Alternator Overload Alarm**
		• Check alarm is generated if:
		  • Engine is On and field current exceeds 4 amperes for 15 seconds, or exceeds 6 amperes for 5 seconds
		  • The engine stops and will then attempt to restart after 20 minutes.

61	Check/Shutdown	**Low or High Battery Alarm**
		• A Check alarm is generated if:
		  • During engine preheating: The battery voltage is below 9.0 Volts for 3 seconds. Controller will attempt to start engine without preheat
		  • Engine is Off: The battery voltage is below 12.2 Volts for 3 minutes. If this occurs when the unit is in a restart null mode, the engine immediately attempts to start
		  • Engine is On: The battery voltage is above 16.0 Volts for 3 minutes
		• A Shutdown alarm is generated if:
		  • The unit has attempted a start and a controller reset occurs before the unit start is completed

63	Check	**Engine Stopped - Reason Unknown**
		• A Check alarm is generated if:
		  • Engine is Off: The engine has stopped when it should be running
		  • The engine will attempt to restart after 20 minutes

Alarm Codes List

Alarm Code	Type	Cause or Explanation

*66	Check/Shutdown	**Low Engine Oil Level**
		• A Check alarm is generated if:
		  • Engine is Off and the oil level switch indicates low oil level (closed) for 3 minutes
		  • Engine is On, oil pressure sensor is high, but low oil level switch indicates low oil level (closed) for 3 minutes
		• A Shutdown alarm is generated if:
		  • Engine is On, the oil level switch indicates low oil level (closed) for 3 minutes, and the low oil pressure switch indicates no oil pressure (closed)
		***Pretrip:**
		• A Shutdown alarm is generated if:
		  • During the Engine Off portion of the pretrip test, the oil level switch indicates low oil level (closed) for 3 seconds

*69	Check	**Field Relay Circuit** • A Check alarm is generated if: • Field relay is energized and the field current is less than 0.3 amperes for 10 seconds ***Pretrip:** • A Check alarm is generated if the fault conditions above occur during a pretrip test

70	Check	**Hourmeter Exceeds Limits**
		• A Check alarm is generated if:
		  • One or more hourmeters exceeds 99,999
		  • Restart counter has exceeded 9999

71	Check	**Hourmeter Exceeds Limits** • A Check alarm is generated if: • Programmable hourmeter 1 has exceeded the set limit. Clearing this code will also reset the hourmeter 1.
72	Check	**Hourmeter Exceeds Limits** • A Check alarm is generated if: • Programmable hourmeter 2 has exceeded the set limit. Clearing this code will also reset the hourmeter 2.
74	Shutdown	**Control Reverted to Default Settings** • A Shutdown alarm is generated if: • Controller reverts to factory programmable settings due to a chip change in the controller or due to performing a controller cold start
88	Check	**Shutdown Microprocessor Fault Alarm** • A Check alarm is generated if: • Controller has found a fault condition with either its RAM or EEprom. If this alarm occurs twice the controller should be returned for repair.

Electrical Maintenance

Battery

CAUTION: Place the Unit On/Off switch in the "OFF" position, Before connecting or disconnecting the unit battery,

Inspect and clean the battery terminals, check the electrolyte level during scheduled maintenance inspections. The minimum specific gravity should be 1.235. Add distilled water as necessary to maintain the proper water level.

A dead or low battery can be the cause of an ammeter indicating discharge due to lack of initial excitation of the alternator.

NOTE: If the battery was discharged enough that a boost was needed, the alternator may not recharge the battery. This is because there may not be adequate current to excite the alternator field.

Fuse Link

The fuse link is located inside the unit control box on the back of the µP-G microprocessor. The fuse link protects the electric system from a short in the 2 (2A or 2B) circuit. It also protects the electrical system should a circuit breaker fail to open. If the fuse link burns out, check for a grounded 2 (2A or 2B) wire or a short in the air heater or alternator circuits. Also check for any condition that would cause a circuit breaker to open. If a circuit breaker is defective, replace it before replacing the fuse link.

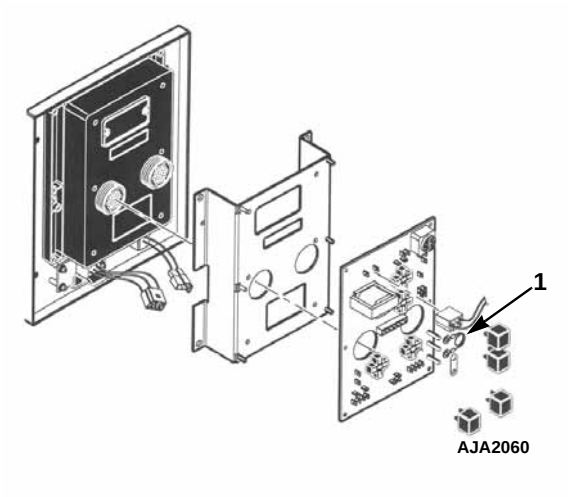

Figure 25: Fuse Link

Circuit Breaker CB1

This 25 amp auto reset circuit breaker protects the unit control circuits. It is located on the exciter tray assembly. If this circuit breaker opens, check the unit for a grounded wire or a grounded condition in a relay or a solenoid.

Field, Preheat, Start and Run Relays

These are 12 Vdc relays. These relays are identical and interchangeable. Test a relay by interchanging it with a known good relay.

Field Relay

The field relay grounds the exciter field circuit 15-20 seconds after unit startup. The field relay must be grounded to energize the battery charging circuit. If the field relay fails in the open position, the battery charging circuit will not work. If the field relay fails in the closed position, the exciter field will remained energized.

Preheat Relay

The preheat relay supplies power to the air heater relay and the buzzer. If the preheat relay fails in the open position, the air heater would not preheat and the engine may not start, resulting in the cranking time limit being exceeded. If the preheat relay fails in the closed position, the air heater will remain energized.

Start Relay

The start relay is energized by the controller after proper preheat time has occurred. When this relay energizes, the starter solenoid receives power and the engine cranks. If the start relay fails in the open position, the engine would not crank. If the relay failed in the closed position, the starter would continue to crank after the unit started.

Run Relay

The run relay supplies power to the fuel solenoid. If the run relay fails in the closed position, the unit would operate continuously and not stop for a protection shutdown. If the relay fails in the open position, the fuel solenoid would not stay in.

Buzzer

The buzzer module on the circuit board sounds off when the air heater relay is energized for preheat and starting.

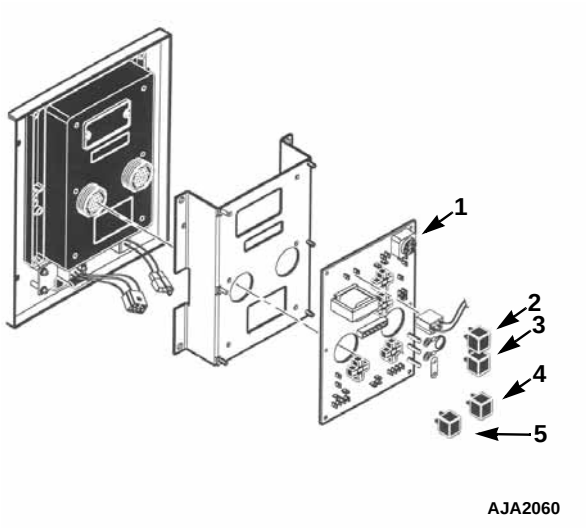

1.	Buzzer
2.	Field Relay
3.	Preheat Relay
4.	Start Relay
5.	Run Relay

Figure 26: Relays

Unit Wiring

Inspect the unit wiring and wire harnesses during scheduled maintenance inspections for loose, chaffed or broken wires. This will protect against unit malfunctions due to open or short circuits.

12 Vdc Charging System

Battery charging current is supplied by a transformer and rectifier utilizing current from the ac alternator. The battery charging circuit provides current to the battery until the proper charge level is attained (13.1 to 14.6 volts).

The alternator exciter field is energized by the µP-G Field Conversion Module. This initiates battery charging approximately 15 seconds after engine start-up.

NOTE: The engine must run for approximately 15 seconds before the battery charging circuit is energized. When Delayed Cold Start feature is set to YES, controller shows "dELAY / AC" screen and the alternator output remains off until the engine temperature increases to 32 C (90 F).

Air Heater

The air heater heats the intake air to help the engine start in cold weather. The air heater is energized when the controller initiates a unit start-up (unit On/Off switch in the "ON" position).

The air heater is mounted on the open end of the intake manifold. Check the resistance of the air intake heater with an ohmmeter. Place the ohmmeter leads between the M6 terminal on the front of the heater and the screw on the back of the heater (or the heater case). The resistance should be 0.1 to 0.2 ohms.

Check the current draw of the heater with a clamp-on ammeter while the engine is cranking. Connect ammeter at the H wire near the M6 terminal on the front of the heater. The current draw should be approximately 89 amps at 12.5 volts. The heater is probably defective if the current draw is less than 60 amps or more than 100 amps.

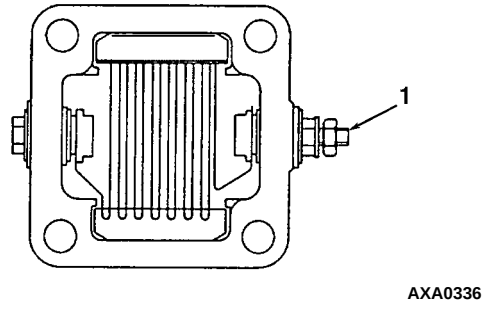

1.	M6 Terminal

Figure 27: Air Heater

Engine Low Oil Pressure Switch

Engine oil pressure should rise immediately on starting. This causes the oil pressure switch to open. If the oil pressure drops below 117 ± 21 kPa (1.17 ± 0.21 bar) (17 ± 3 psi), the switch will close. This causes the controller to stop the engine. A continuity tester is needed to check the oil pressure switch. To check switch continuity complete the following steps:

1. Remove wire OPS from the switch.
2. Continuity tester should indicate a complete circuit between the terminal and ground.
3. Start the engine. Tester should show an open circuit between each terminal and ground. Repair consists of replacing the switch.

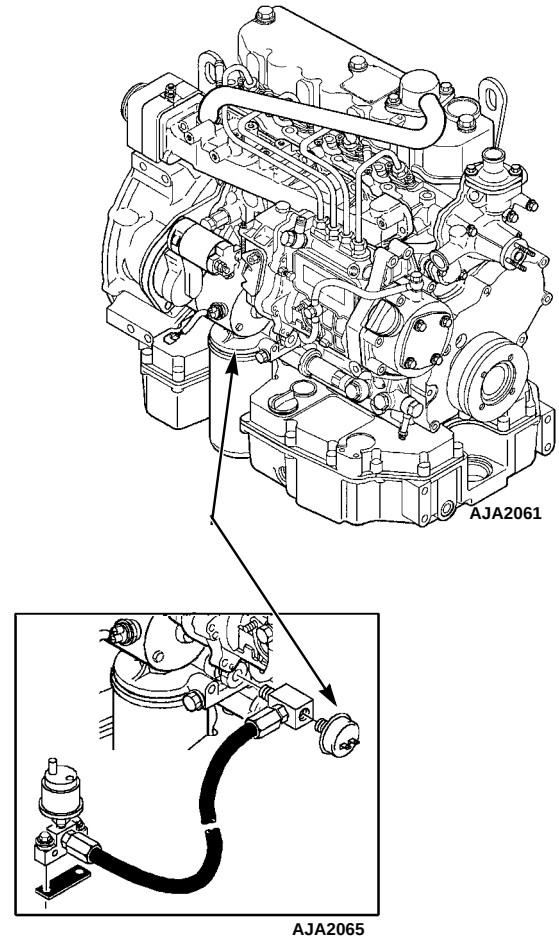

Figure 28: Engine Oil Pressure Switch

Oil Pressure Sensor

NOTE: This sensor has been deleted on all units starting with software version V0430.

The oil pressure sensor is connected to the engine oil system. It uses oil pressure to present a variable resistance to the controller. Test the oil pressure sensor if the controller records Alarm Code 31 and the oil pressure appears to be normal.

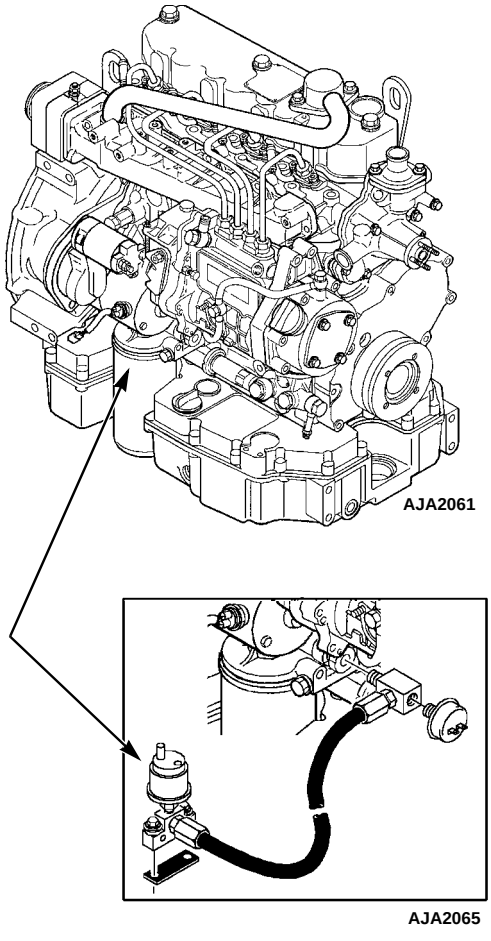

Figure 29: Oil Pressure Sensor

Sensor Test

1. Turn the unit On/Off switch to the “Off” position.
2. Disconnect the OSP and OSN wires from the oil pressure sensor.
3. Turn the unit ON/OFF switch to the “ON” position.

   NOTE: Polarity must be considered when connecting pressure sensors. If a sensor is connected backwards, the display will show four dashes (- - -). Consult the unit wiring diagram or schematic for correct connections.

4. Enter the controller View menu and scroll to the oil pressure screen. The display should show “---- / OiL”. If all sensors show “----” in the top display, the controller may be defective or the sensor polarity may be reversed. Test the controller and check the sensor wiring for correct polarity.
5. Using a digital voltmeter, check the voltage from the OSP wire to OSN. The voltage must be 7 volts or more.

   a. If the top display showed “----” and the voltage is 7 volts or more, the sensor is defective. Replace the sensor. Be sure to reconnect the OSP wire after service is complete.

   b. If the top display showed something other than “----” or the voltage is less than 7 volts, the wire harness or the controller is defective, not the sensor. Continuity test the wire harness OSP circuit. Test the controller.

Oil Level Sensor

If the engine oil level drops below the actuation level, the low oil level sensor (OLS) switch will close. This will cause the controller to stop the engine. The oil level switch is located in the oil pan on the front side of the engine near the oil filter.

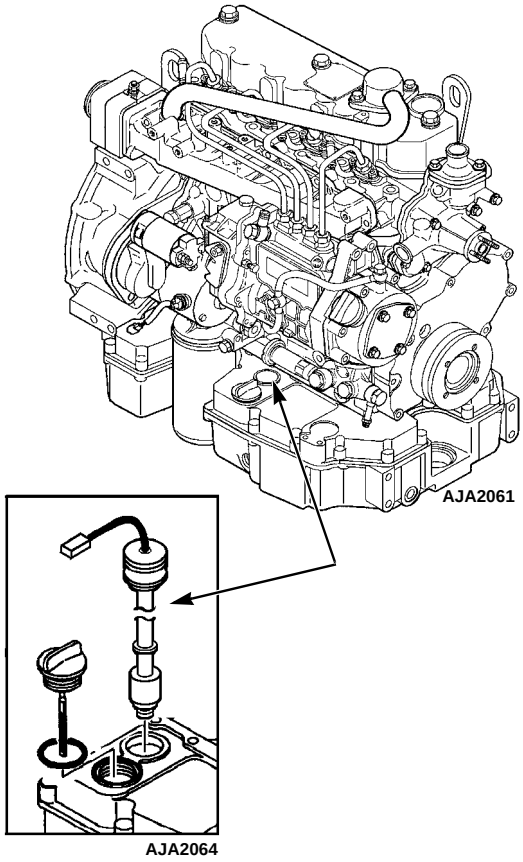

Figure 30: Oil Level Sensor

Switch Test

1. Turn the unit ON/OFF switch to the “OFF” position.
2. Disconnect the switch wires from the main wire harness.
3. Connect a continuity tester to the two sockets in the low oil level switch wire connector.
4. Check the oil level with the dipstick. Make sure that it is between the low mark and the full mark. Add oil if necessary.
5. The switch should be open and there should be no continuity between the switch wires. (When the oil level is between the low mark and the full mark on the dipstick).

Bench test the switch if there is continuity between the OLS and CH wires and there are no short circuits in the wires.

Switch Removal and Installation

1. Disconnect the switch wires from the main wire harness before removing the switch.
2. Remove the push-in style switch by carefully prying it out of the oil pan with a pry bar. The neoprene seal may stay in the oil pan.
3. To install the push-in style switch, first remove the neoprene seal from the switch. Lubricate the neoprene seal and install it in the oil pan. Then press the switch into the neoprene seal. No tools are required.
4. Connect the switch wires to the main wire harness after installing it.

NOTE: The low oil level switch must have a drip loop formed in wire leads as shown in the illustration. The drip loop prevents water from entering the switch through the end of the sleeve that protects the switch wires.

Bench Test

1. Disconnect the switch wires from the main wire harness. Remove the switch from the oil pan.
2. Use a small container partially filled with engine oil to check the float. Make sure that it floats in engine oil and that it slides freely between the upper and lower stops.
3. Slide the float up to the upper stop. Check the continuity through the switch (between OLS and CH wires). The switch should be open.
4. Slide the float down to the lower stop. Check the continuity through the switch. The switch should be closed.
5. Replace the switch if the float sinks or does not slide freely, or if the switch does not open and close properly.

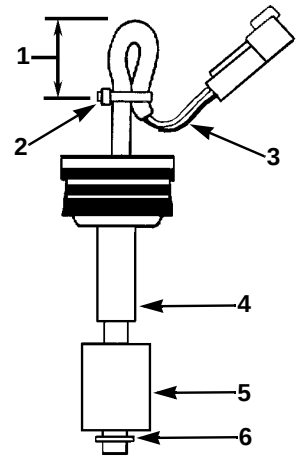

1.	19 mm (0.75 in.)
2.	Secure with Tie Band
3.	Drip Loop with Open End of Sleeving Pointed Down
4.	Upper Stop
5.	Float
6.	Lower Stop

Figure 31: Push-in Style Oil Level Switch

Coolant Temperature Sensor

The coolant temperature sensor is connected to the engine coolant system near the water pump. It uses coolant temperature to present a variable resistance to the controller. Test the coolant temperature sensor if the controller records Alarm Code 18 or 41 and the coolant temperature appears to be normal.

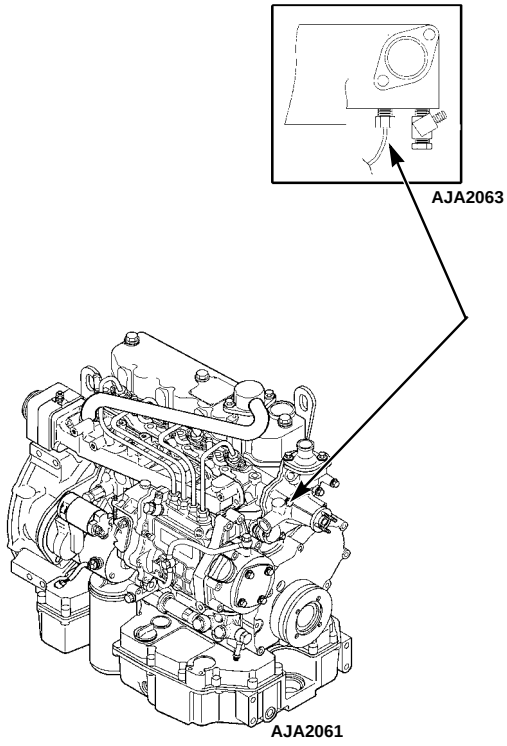

Figure 32: Coolant Temperature Sensor

Sensor Test

1. Turn the unit On/Off switch to the “OFF” position.
2. Disconnect the sensor at the plug next to the sensor.
3. Turn the unit On/Off switch “ON”.

NOTE: Polarity must be considered when connecting temperature sensors. If a sensor is connected backwards, the display will show four dashes (----) and record Alarm Code 06. Consult the unit wiring diagram or schematic for correct connections.

4. Enter the controller View menu and scroll to the engine temperature screen. The display should show “---- / Ent”. If all sensors show “----” in the top display, the controller may be defective or the sensor polarity may be reversed. Test the controller and check the sensor wiring for correct polarity.
5. Using a digital voltmeter, check the voltage at the sensor plug connected to the controller. The voltage must be from 4.90 to 5.10 Vdc.
   a. If the voltage is correct, disassemble and inspect the coolant sensor plug. Replace the sensor if there are no broken wires or pushed pins in the plug.
   b. If the voltage is incorrect, recheck the voltage at the same circuit at pins 1 and 2 of the CN7 connector on the back of the controller. The voltage must be from 4.90 to 5.10 Vdc. If the voltage is correct at the controller, the problem is in the wiring. Continuity test the wire harness circuits. If the voltage is incorrect again, the controller is defective. Test the controller.

Coolant Level Detector Sensor

The coolant level detector sensor is a stainless steel probe immersed in the coolant. It is located on the side of the radiator. It does not fail or wear out, but may fail to conduct current if it is dirty.

The sensor will no longer conduct current to return a signal to the controller if the coolant level drops too low in the radiator. After 30 seconds, the controller will record Alarm Code 37. Test the coolant level sensor if the controller records Alarm Code 37 and the radiator is full of coolant.

WARNING: DO NOT remove the radiator cap from the radiator fill neck when the engine coolant is hot.

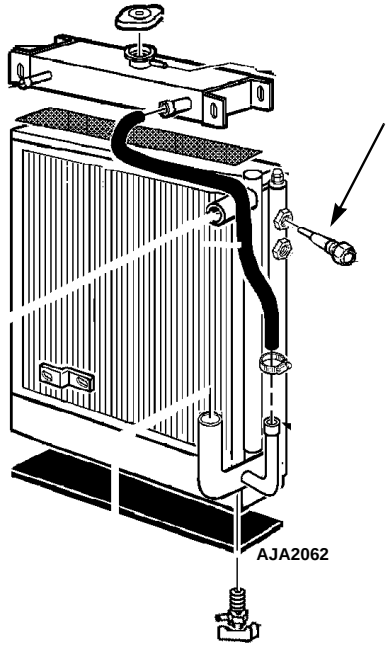

Figure 33: Coolant Level Detector Sensor

Sensor Test

1. Ground the sensor to chassis ground with a jumper wire.
2. Attempt to clear Alarm Code 37 from the controller.
   - If Alarm Code 37 clears, clean the sensor.
   - If Alarm Code 37 does not clear, test the wire harness for continuity. Also test the controller.

Flywheel Sensor

The flywheel sensor is in the engine bell housing adjacent to, but not touching, the flywheel (backed off 1/2 turn).

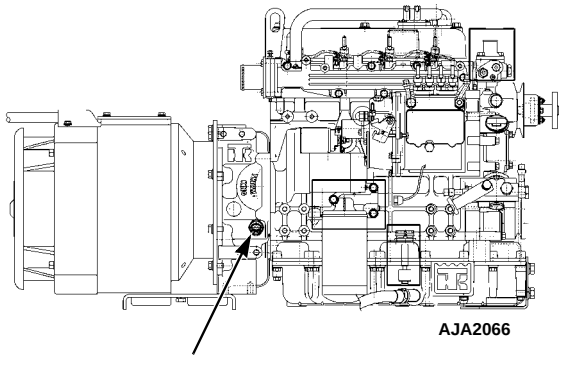

Figure 34: Flywheel Sensor

The flywheel sensor is a device containing an inductance coil and magnet. When the magnetic field is distorted by the passing ring gear teeth, the inductance coil generates an ac electrical signal. The signal has a voltage and frequency variation proportional to the engine rpm.

The timing of the starter disengagement can be precisely controlled by monitoring the frequency of this signal with the starter disconnect module.

The starter may not disengage or engage properly, if the flywheel sensor fails.

Testing the Flywheel Sensor

Equipment required:

- AC voltmeter capable of reading up to 10 volts
- Ohmmeter
- SG unit for installing the sensor in the threaded hole in the flywheel housing.

To test the flywheel sensor:

1. Install the flywheel sensor into the threaded hole in the flywheel housing of an SG unit until it contacts the ring gear.
2. Back out the sensor 1/2 turn and tighten the locknut.
3. Disconnect wires FS1 and FS2 from the sensor.
4. Start and operate the unit.
5. Check the ac voltage output across the sensor terminals. Use a meter with a high ohms per volt internal resistance. A Simpson 260, Fluke digital or any good VOM will work. However, an automotive type meter may not give an accurate reading because the meter may load the circuit heavily and cause the voltage level to appear lower than actual. The output voltage should be 1.5 to 2.0 Vac.

   NOTE: If the voltage is slightly off, the voltage may be increased by turning the sensor in more. The voltage may be lowered by turning the sensor out more.
6. Reconnect FS1 and FS2 wires on flywheel sensor.

The sensor may be considered good if the flywheel sensor passes the above test. If a unit is not available, an alternate but less reliable test may be performed as follows:

1. Disconnect the sensor from all wires.
2. Measure the resistance across the terminals. The resistance should be 250 to 300 ohms across the terminals.
3. Measure the resistance from each terminal to the aluminum case. There should be no continuity from each terminal to the case.

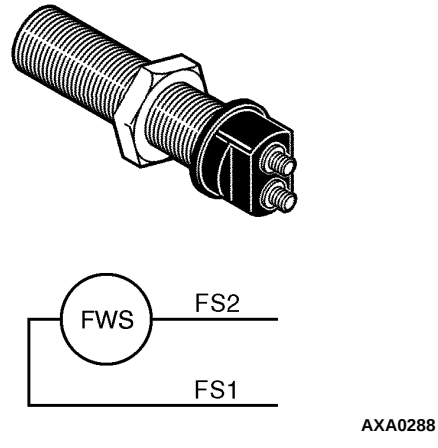

Figure 35: Flywheel Sensor with Wiring and Schematic Symbols

Engine Change

In the second quarter of 2005 the engines in these units changed from a TK486E to a TK486V to meet EPA Tier 2 requirements.

The TK486E is an EPA Tier 1 engine.

The TK486V is an EPA Tier 2 engine.

The Tier 1 and Tier 2 engines share many common parts, however the following major parts are new on the Tier 2 engine:

- Cylinder Head Assembly
- Injection Nozzles
- Injection Pump
- Oil Pump
- Pistons
- Piston Rings
- Starter
- Water Pump
- Engine Thermostat
- 950 CCA Battery

The most noticeable difference between a Tier 1 engine and a Tier 2 engine is the fuel injection pump (see the following photographs). The Tier 1 engines use an in-line injection pump. The Tier 2 engines use a mono-plunger and distributor injection pump. The mono-plunger and distributor injection pump uses a higher injection pressure than the in-line injection pump. The higher injection pressure atomizes the fuel more efficiently, which reduces the emissions.

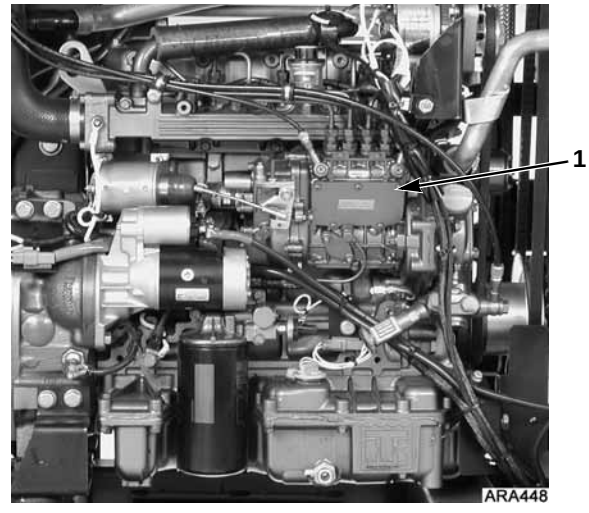

1.	In-Line Injection Pump

Figure 36: Tier 1 Engine

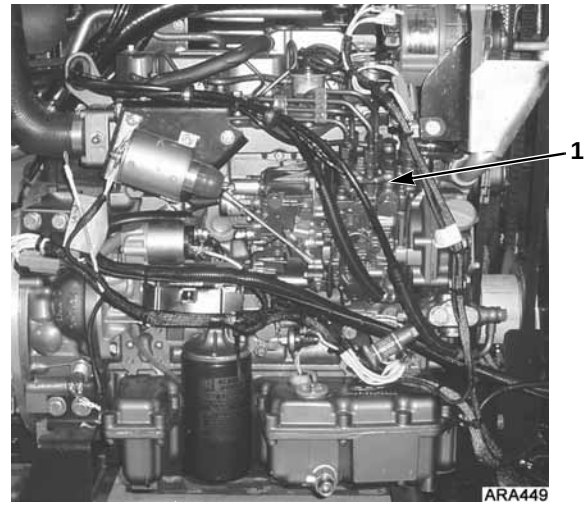

1.	Mono-Plunger and Distributor Injection Pump

Figure 37: Tier 2 Engine

EMI 3000

EMI 3000 is an extended maintenance interval package. It was phased in as standard equipment on these units in the first quarter of 2001. The EMI 3000 package consists of the following key components:

- New EMI 3000-Hour Cyclonic Air Cleaner Assembly and Air Cleaner Element
- New EMI 3000-Hour Fuel Filter (black with gold lettering)
- New EMI 3000-Hour Dual Element Oil Filter (black with gold lettering)
- API Rating CI-4 Mineral Oil (ACEA Rating E3 for Europe)
- Five Year or 12,000 Hour ELC (Extended Life Coolant).

The EMI package allows standard maintenance intervals to be extended to 3,000 hours, or 2 years, whichever occurs first.

NOTE: Units equipped with the EMI 3000 package do require regular inspection in accordance with Thermo King's maintenance recommendations.

NOTE: The new EMI 3000 oil filters and new EMI 3000 air cleaners are NOT interchangeable with the oil filters and air cleaners previously used in trailer units.

Engine Lubrication System

The TK486 family of engines use a pressure lubrication system. Refer to the TK482 and TK486 Engine Overhaul Manual TK 50136 for a detailed description of the engine lubrication system.

Engine Oil Change

The engine oil should be changed according to the Maintenance Inspection Schedule. Drain the oil only when the engine is hot to ensure that all the oil drains out. When changing oil, keep unit and trailer level so all the oil can flow from the oil pan. It is important to get as much of the oil out as possible because most of the dirt particles are contained in the last few quarts of oil that drain out of the pan. Refill the pan with 12.3 litres (13 quarts) and check the dipstick level. Run the unit, and then recheck the oil level. The engine oil level should be at the FULL mark with the dipstick turned (threaded) into the oil pan. Never overfill. See Specifications Chapter for the correct type of oil.

Oil Filter Change

The oil filter should be changed along with the engine oil. Use a genuine Thermo King extended maintenance oil filter.

1. Remove the filter.
2. Apply oil to the rubber ring of the new filter and install the filter.
3. Tighten the filter until the rubber ring makes contact, then tighten 1/2 turn more.
4. Start the unit and check for leaks.

Low Oil Pressure

Oil pressure is affected by oil temperature, oil viscosity, and engine speed. Low oil pressure can usually be traced to the lack of oil, a faulty oil pressure regulating valve, or worn bearings. Low oil pressure is not normally caused by a faulty oil pump. Use the following “Low Oil Pressure Flow Chart” to help diagnose low oil pressure.

Low Oil Pressure Flow Chart

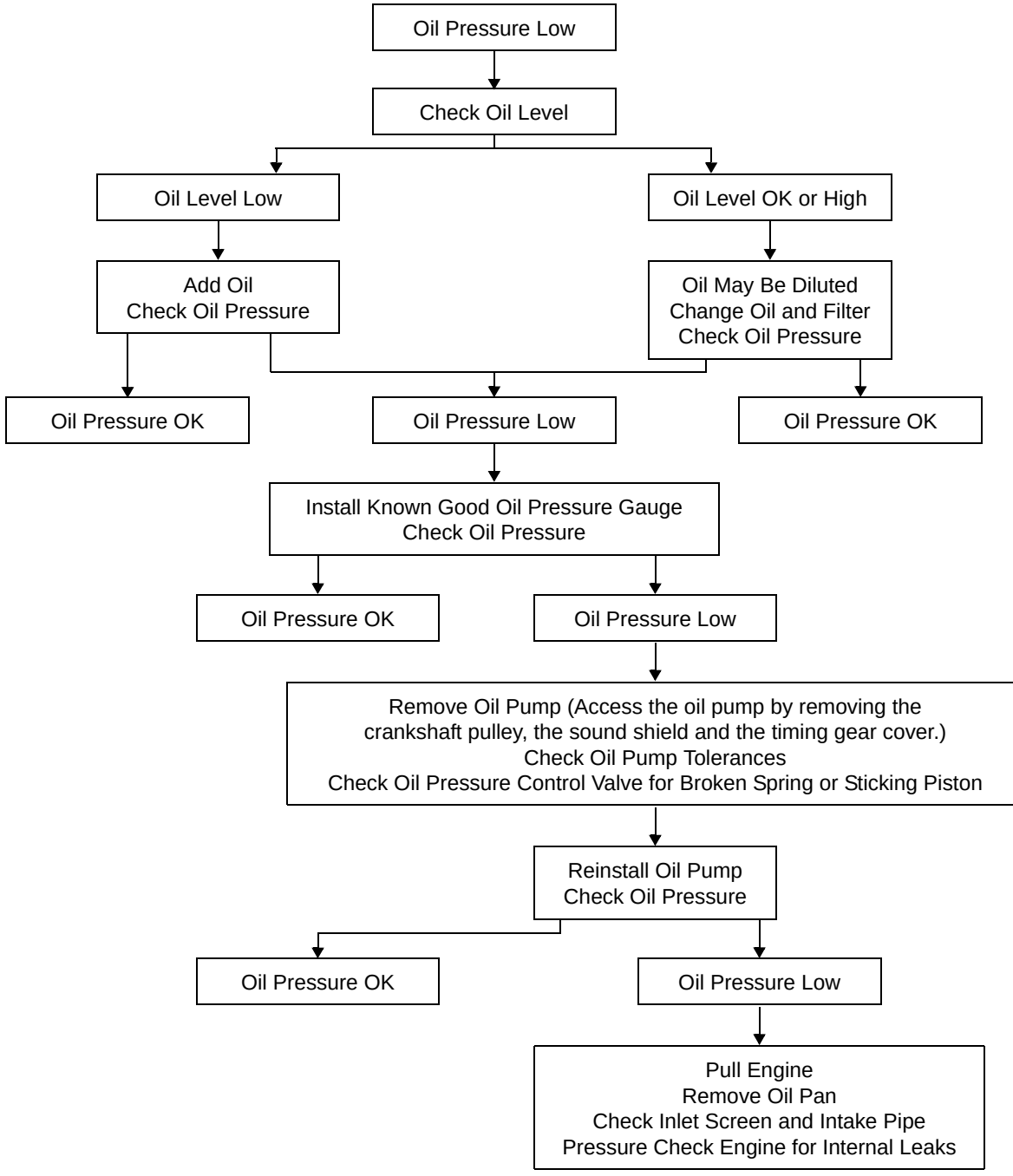

Positive Crankcase Ventilation (PCV) Tier 2 Engine

The Tier 2 engine has a Positive Crankcase Ventilation (PCV) system. It uses a spring and diaphragm, located in the valve cover, to maintain a constant flow of crankcase gas regardless of the intake manifold pressure. This results in a system with a constantly regulated crankcase pressure even in the presence of ring wear or a restricted air cleaner.

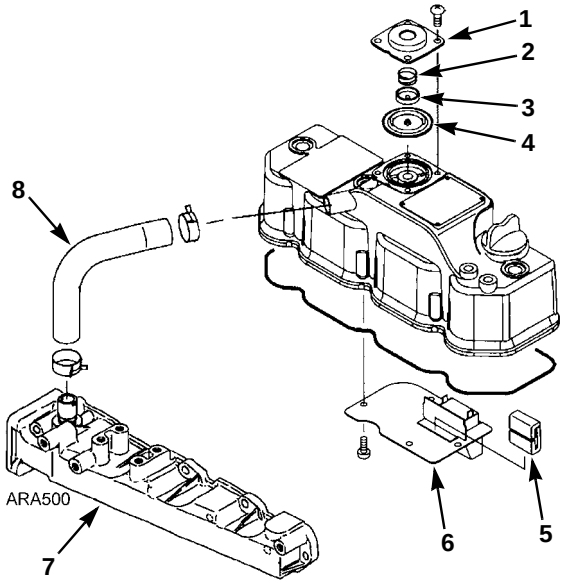

1.	Diaphragm Cover	5.	Baffle Plate
2.	Spring	6.	Baffle Breather
3.	Plate	7.	Intake Manifold
4.	Diaphragm	8	Breather Hose

Figure 38: Tier 2 PCV Components

The following schematic illustrates the PCV operation. In the unrestricted position, gas flow exits the crankcase via the push rod passages and flows past the orifice and diaphragm. Without a PCV system, as air cleaner restriction increased, vacuum and flow would increase in the breather hose to lower the crankcase pressure. To prevent this, the PCV diaphragm expands into the passageway, restricting the flow to maintain a constant, slightly positive crankcase pressure.

Normal crankcase pressures with a new air cleaner are approximately 1.6 to 6.7 in. (40 to 170 mm) of H_2O positive pressure.

The following items can effect the crankcase pressure readings.

Crankcase Pressure Effect	Typical Cause
Increase	Piston Rings Stuck or Worn
Decrease	Air Cleaner Dirty or Plugged
Increase	Breather Hose Plugged with Dirt or Ice
Decrease	PCV Diaphragm Torn
Increase	PCV Diaphragm Frozen to Seat in Valve

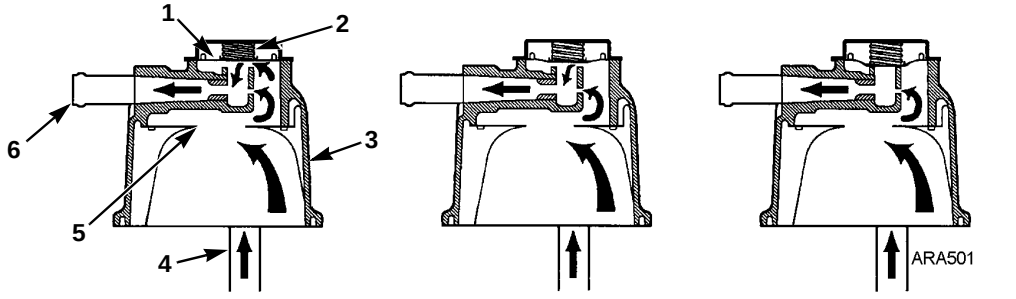

1.	Diaphragm	4.	Push Rod Passages
2.	Spring	5.	Baffle Plate
3.	Valve Cover	6.	To Breather Hose

Figure 39: Tier 2 PCV System

Crankcase Breather Tier 1 Engine

The crankcase breather is located on top of the rocker arm cover. The crankcase breather system ducts crankcase gases formed in the crankcase directly to the air intake. Harmful vapors that would otherwise collect in the crankcase and contaminate the oil, or escape to the outside, are drawn back into the engine and burned. A restrictor is placed in the breather hose to limit the flow gas flow from the crankcase to the intake and keep the crankcase pressure from getting too low.

Normal crankcase pressures with a new air cleaner are 5 to 10 in. (127 to 254 mm) H_2O of vacuum at 1450 rpm and 7 to 11 in. (178 to 279 mm) H_2O of vacuum at 2200 rpm. The vacuum will increase as the air cleaner gets dirty and becomes more restrictive. The crankcase breather and the breather hose should be inspected when the air cleaner element is replaced to make sure they are not plugged or damaged.

NOTE: The breather hose must be routed so it slopes down from the crankcase breather to the intake manifold. This prevents condensation from collecting in the breather hose. The condensation can plug the breather hose if it collects and freezes in the hose.

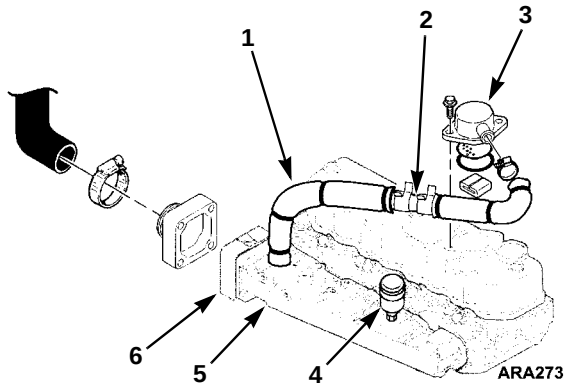

1.	Insulation (Covers breather Hose to prevent freezing.)
2.	Restrictor
3.	Crankcase Breather
4.	Air Restriction Indicator
5.	Intake Manifold
6.	Intake Air Heater

Figure 40: Tier 1 Crankcase Breather

Cyclonic Dry Air Cleaner

The cyclonic dry air cleaner is a dry element air cleaner used on units manufactured after 11/15/02. It filters all of the air entering the engine. Replace the dry air cleaner element when the air restriction indicator reads 25 in. of vacuum, or at 3,000 hours or 2 years, whichever comes first.

NOTE: The dust ejector must point down when installed.

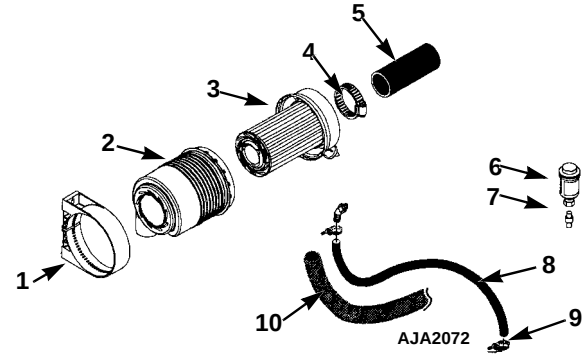

1.	Air Cleaner Clamp
2.	Dry Air Cleaner
3.	Air Cleaner Element
4.	Hose Clamp
5.	Air Cleaner Hose
6.	Air Restriction Indicator
7.	Indicator Fitting
8.	Breather Hose
9.	Band wrap
10.	Insulation Hose

Figure 41: Cyclonic Dry Air Cleaner

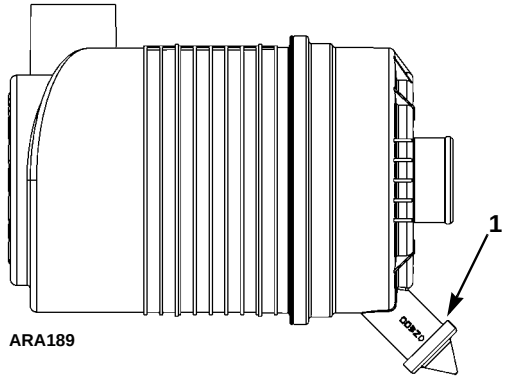

1.	Dust Ejector Must Point Down When Installed

Figure 42: Cyclonic Dry Air Cleaner

Air Restriction Indicator

An air restriction indicator is installed in the air intake manifold on units with a dry air cleaner. Excessive restriction of the air intake system reduces the flow of air to the engine. This affects horsepower output, fuel consumption and engine life.

Periodically inspect the restriction indicator to assure the air filter is not restricted. Service the air filter when the yellow diaphragm indicates 25 in. of vacuum. Press the reset button on the bottom of the restriction indicator after servicing the air filter.

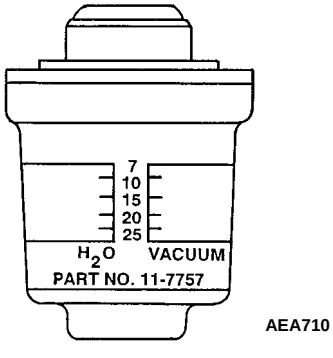

Figure 43: Air Restriction Indicator

Engine Oil Bath Air Cleaner

The oil bath air cleaner is used on units manufactured before 11/15/02. It filters all of the air entering the engine. Excessive restriction of the air intake system reduces the flow of air to the engine. This in turn affects horsepower output, fuel consumption and engine life.

The speed that dirt and foreign particles accumulate at the bottom of the air cleaner sump determines the frequency of cleaning.

1. Remove the reservoir under the filter.
2. Remove the dirty oil and sludge. Remove air cleaner body and clean in a parts washer.
3. Refill the reservoir to the oil level mark with clean engine oil, but DO NOT OVERFILL. Use the same weight oil used in the engine crankcase.

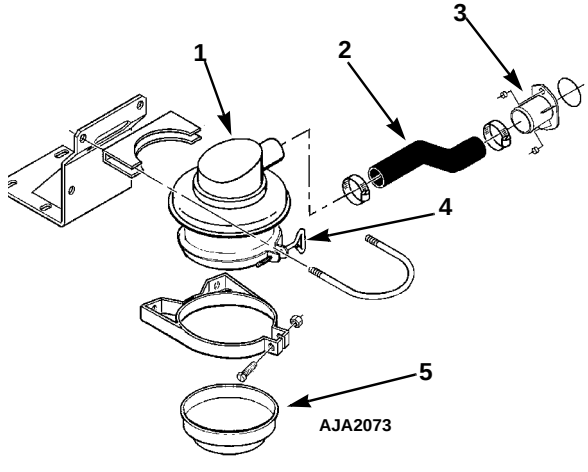

1.	Air Cleaner
2.	Air Cleaner Hose
3.	Air Intake Adapter
4.	Oil Cup Clamp
5.	Oil Cup

Figure 44: Small Oil Bath Air Cleaner System

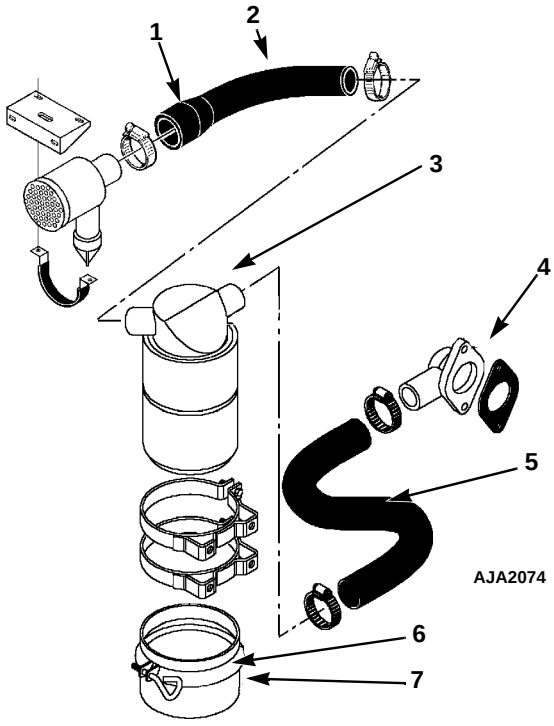

1.	Pre-cleaner (Optional)
2.	Pre-cleaner Hose (Optional)
3.	Air Cleaner
4.	Air Intake Adapter
5.	Air Cleaner Hose
6.	Oil Cup Clamp
7.	Oil Cup

Figure 45: Large Oil Bath Air Cleaner System

Engine Cooling System

The engine uses a closed, circulating type, pressurized cooling system. Correct engine temperatures are controlled and maintained by a radiator, fan and thermostat. The coolant is circulated through the system by a belt-driven centrifugal pump. The pump draws the coolant from the side of the radiator. It circulates the coolant through the cylinder block and head and back to the radiator. A thermostat is mounted in the water outlet from the cylinder head to the radiator. It automatically maintains coolant temperature within the specified temperature range.

All water-cooled engines are shipped from the factory with a 50% permanent type antifreeze concentrate and 50% water mixture in the engine cooling system. Benefits include:

1. Prevents freezing down to -34 C (-30 F).
2. Retards rust and mineral scale that can cause the engine to overheat.
3. Retards corrosion (acid) that can an attack accumulator tank, water tubes, radiator and engine block plug.
4. Provides lubrication for the water pump seal.

ELC (Extended Life Coolant)

ELC has been phased into all container units equipped with engines from the TK486 engine family. A nameplate on the coolant expansion tank identifies units with ELC.

NOTE: The new engine coolant, Texaco Extended Life Coolant, is RED in color instead of the current GREEN or BLUE-GREEN colored coolants.

Figure 46: ELC Nameplate Located On Expansion Tank

The following are the Extended Life Coolants currently approved by Thermo King for use in ELC units for five years or 12,000 hours:

- Chevron Dex-Cool
- Texaco ELC (nitrite free)
- Havoline Dex-Cool (with nitrates)
- Havoline Dex-Cool (nitrite free)
- Shell Dexcool
- Shell Rotella

- Havoline XLC (Europe)
- Saturn/General Motors Dex-Cool
- Caterpillar ELC
- Detroit Diesel POWERCOOL Plus.

CAUTION: Do not add "GREEN" or "BLUE-GREEN" conventional coolant to cooling systems using "RED" Extended Life Coolant, except in an emergency. If conventional coolant is added to Extended Life Coolant, the coolant must be changed after 2 years instead of 5 years.

NOTE: The use of 50/50 percent pre-mixed Extended Life Coolant (ELC) is recommended to assure that de-ionized water is being used. If 100 percent full strength concentrate is used, de-ionized or distilled water is recommended over tap water to insure the integrity of the cooling system is maintained.

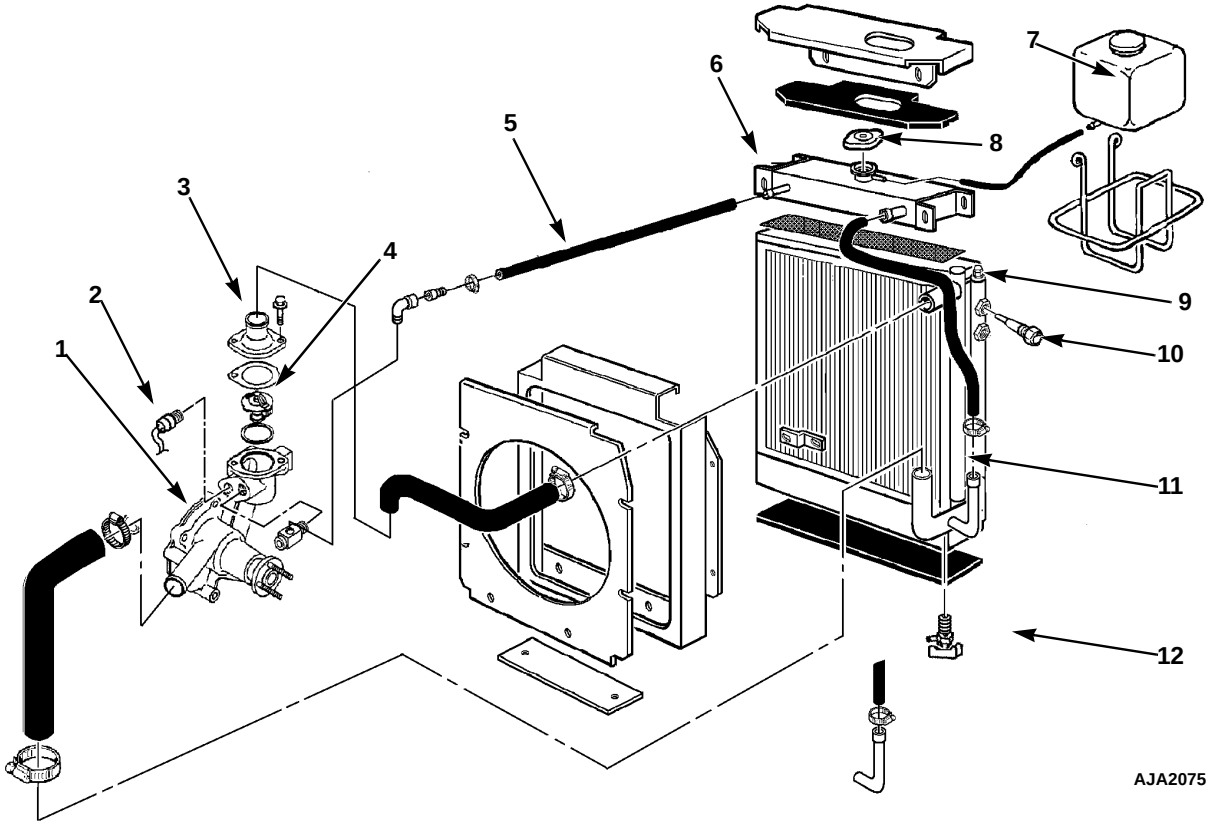

1.	Water Pump	7.	Overflow Tank
2.	Water Temperature Sensor	8.	Radiator Cap
3.	Engine Thermostat Housing	9.	Vent Fitting for Bleeding Air from Radiator (recently built models)
4.	Engine Thermostat	10.	Water Level Sensor
5.	Vent Hose	11.	Radiator
6.	Expansion Tank	12.	Drain Cock, Radiator

Figure 47: SGCM and SGSM Engine Cooling System

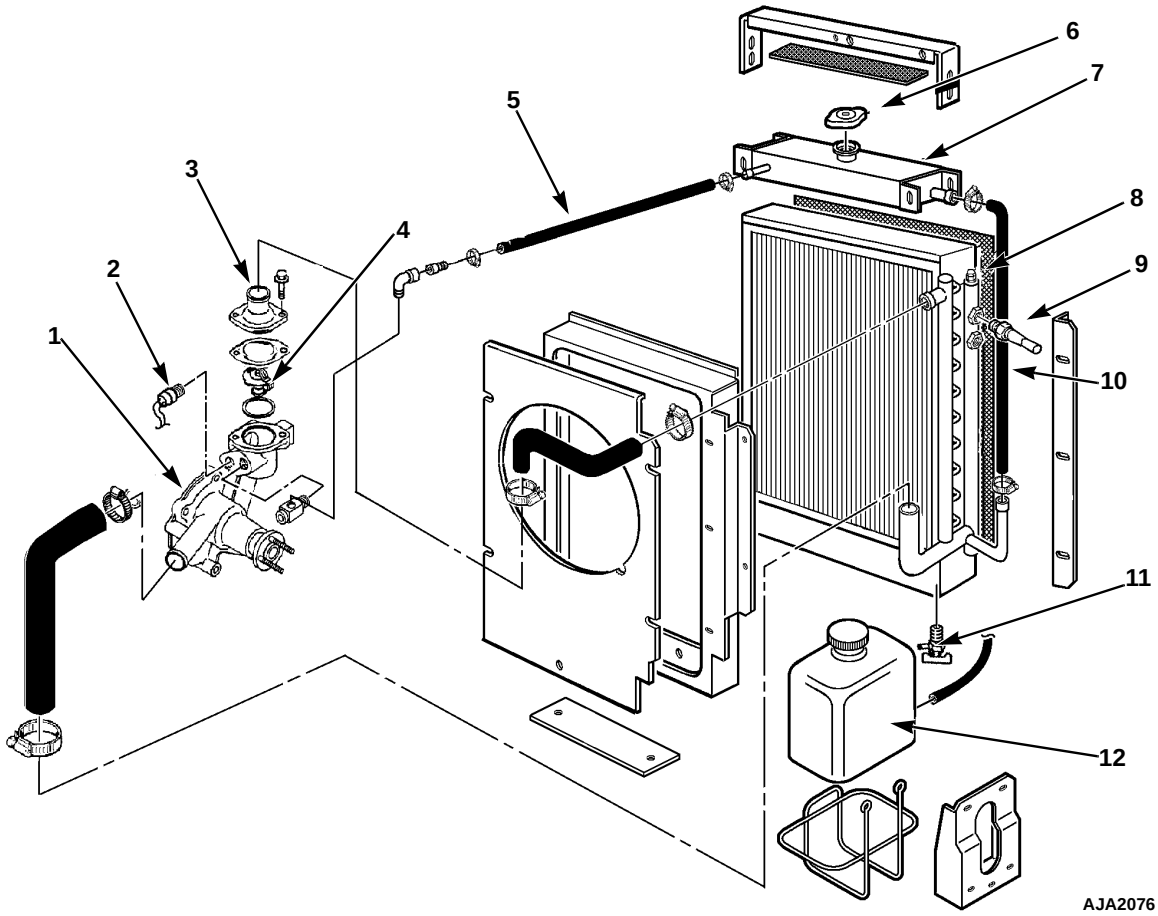

1.	Water Pump	7.	Expansion Tank
2.	Water Temperature Sensor	8.	Vent Fitting for Bleeding Air from Radiator (recently built models)
3.	Engine Thermostat Housing	9.	Water Level Sensor
4.	Engine Thermostat	10.	Radiator
5.	Vent Hose	11.	Drain Cock, Radiator
6.	Radiator Cap	12.	Overflow Tank

Figure 48: SGCO Engine Cooling System

Antifreeze Maintenance Procedure

Regular inspection is required to verify the condition of the antifreeze. The inhibitors in conventional antifreeze (green or blue-green color) become worn out and must be replaced by changing the antifreeze after 1 year of service. The inhibitors in Extended Life Coolant (ELC) antifreeze (red color) extend change intervals to 5 years or 12,000 hours.

A decal tag on the coolant expansion tank will identify units with ELC antifreeze and ELC compatible water pump with HNBR elastomer seal bellows and EPDM elastomer O-rings (gensets built after 2/6/01). Therefore ELC antifreeze should not be used on older units with standard water pumps (NBR seal bellows and NBR O-rings). All Yanmar (TK486) engines with serial number L16553 and after include a new ELC compatible water pump for use with ELC antifreeze.

ELC coolants are available in 100 percent full strength concentrate or (pre-mixed) 50/50 percent mixture. Thermo King recommends the use of 50/50 percent pre-mixed ELC antifreeze to assure that de-ionized water is used. 100 percent concentrate extended life coolant must be mixed with de-ionized or distilled water (NOT tap water) to ensure cooling system integrity.

NOTE: See Specifications chapter for coolant capacity and correct type of antifreeze for your unit.

CAUTION: With both Extended Life Coolant (EMI 3000) and Conventional Coolant (non-EMI 3000) equipped units operating in the field, there are several important rules to remember:
• Extended Life Coolant (ELC) is RED in color while conventional coolant is GREEN or BLUE-GREEN.
• Do NOT add "RED" coolant to cooling systems using "GREEN" or "BLUE-GREEN" coolant.
• Do NOT add "GREEN" or "BLUE-GREEN" coolant to cooling systems using "RED" coolant.

When changing antifreeze, drain, flush and replace the total antifreeze mixture to maintain total cooling system protection. To prevent mineral scale, use water with a total hardness under 170 ppm. If the total water hardness is over 170 ppm, soften the water or use distilled water. The water must also be de-mineralized, de-ionized or distilled if it does not meet the following requirements: chlorides concentration under 40 ppm, sulfates concentration under 100 ppm and total dissolved solids under 340 ppm.

The factory recommends the use of a 50/50 antifreeze/water mixture in all units. Even if they are not exposed to freezing temperatures. A 50/50 antifreeze mixture will provide the required corrosion protection and lubrication for the water pump.

Checking the Antifreeze

WARNING: Avoid direct contact with hot coolant.

Check the solution concentration by using a temperature compensated antifreeze hydrometer or a refractometer designed for testing antifreeze. A refractometer works with both ELC and conventional antifreeze. Maintain a minimum of 50 percent permanent type antifreeze concentrate and 50 percent water solution to provide protection to -34 C (-30 F). Do not mix antifreeze stronger than 68 percent permanent type coolant concentrate and 32 percent water for use in extreme temperatures.

Changing the Antifreeze

1. Operate the engine until it is up to operating temperature. Then stop the unit.
2. Open the engine block drain and completely drain coolant. Observe coolant color. If the coolant is dirty, proceed with a, b, and c. Otherwise go to step 3.
   a. Pour clear water into radiator and allow it to drain out of the block until it is clear.
   b. Close the block drain and install a commercially available radiator and block flushing agent. Operate the unit in accordance with instructions of the flushing agent manufacturer.
   c. Open the engine block drain to drain water and flushing solution.
3. Pour clear water into the radiator. Allow it to drain out of the block until it is clear.
4. Inspect all the hoses for deterioration and the hose clamps for tightness. Replace if necessary.
5. Loosen the water pump belt. Check the water pump bearing for looseness and retighten the belt (See "Belt Tension Adjustment and Belt Replacement" in this chapter).
6. Inspect the radiator cap. Replace the cap if the gasket shows any signs of deterioration.

7. Prepare 8 liters (2 gallons) of 50/50 percent antifreeze/water mixture. Do not add antifreeze and then water to the unit. This procedure may not give a true 50/50 mixture because the exact cooling system capacity may not be known.

   NOTE: Thermo King recommends the use of 50/50 percent pre-mixed ELC antifreeze to assure that de-ionized water is used. 100 percent concentrate extended life coolant must be mixed with de-ionized or distilled water (NOT tap water) to ensure cooling system integrity.

8. Close all drains. On recently built units, also open vent fitting on top of the inlet header on the radiator. Refill the radiator with the 50/50 antifreeze mixture. Make sure all air is bled from the cooling system.

NOTE: Make certain all air is purged from the cooling system, especially on centermount and sidemount units. Recently built units include a special vent fitting on the top of the inlet header on the radiator. Open this fitting to bleed air from the cooling system when refilling the radiator with coolant.

Bleeding Air from the Cooling System

A jiggle pin thermostat prevents air from being trapped in the engine block. This should make it unnecessary to bleed the air out of the engine. Normally approximately 8.5 liters (9 quarts) of coolant will drain from the cooling system. If only 4 liters (4 quarts) of coolant fill the cooling system after it has been drained, air has been trapped in the block. Bleed the air out of the block using the following procedure:

CAUTION: If you suspect that air is trapped in block, do not start the engine without bleeding the air out of the block.

NOTE: If an engine operates with air trapped in the block, engine damage could occur. The high water temperature switch may not protect an engine that has air trapped in the block.

1. Loosen the plug on the back of the water pump before pouring coolant into the cooling system. Recently built units also include a special vent fitting on the top of the inlet header on the radiator. Also open this fitting to bleed air from the radiator.
2. Slowly pour coolant into the system until coolant comes out of the bypass hose (or plug) fitting.
3. Tighten the plug on the water pump.
4. Pour coolant into the system until it appears to be full.
5. Make sure that the amount of coolant that goes back into the system is approximately equal to the amount of coolant that was drained from the system.
6. Start and operate the unit for a minute. Then stop the unit.
7. Check the coolant level and add coolant if necessary.
8. Repeat steps 6 and 7 until the coolant level stabilizes.
9. Close the vent fitting on the top of the inlet header on the radiator (recently built units only).

Engine Thermostat

Tier 1 engines use a 82 C (180 F) thermostat.

Tier 2 engines use a 71 C (160 F) thermostat.

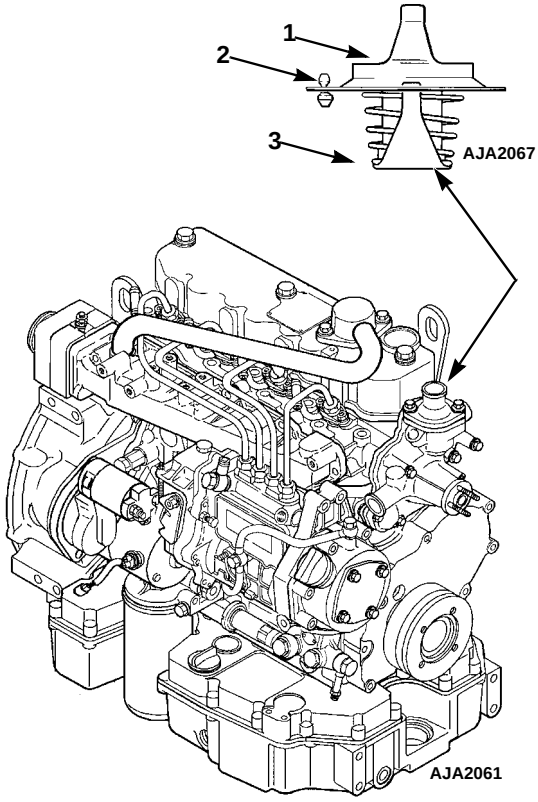

1.	Thermostat
2.	Jiggle Pin
3.	Install This End Toward Engine

Figure 49: Engine Thermostat

Engine Fuel System

Tier 1 engines use an in-line injection pump.

Tier 2 engines use a mono-plunger and distributor injection pump.

The components of a typical fuel system include:

1. Fuel tank
2. Fuel strainer (inlet to transfer pump)
3. Fuel filter
4. Water separator
5. Hand fuel pump
6. Transfer pump
7. Injection pump
8. Injection nozzles

The hand fuel pump is used to manually draw fuel from the tank up to the transfer pump if the unit should run out of fuel.

The transfer pump draws fuel from the fuel tank through a fuel inlet strainer at the inlet to the transfer pump. The transfer pump then delivers fuel through the fuel heater to the water separator and fuel filter. Filtered fuel passes through a line from the outlet fitting on the filter base to the injection pump.

The TK486 diesel engine uses an in-line injection pump. The injection pump camshaft is driven at one end by the engine timing gears. The cam lobes actuate the plungers, forcing fuel through the injection nozzles. A governor assembly is connected to the other end of the injection pump camshaft. The governor meters the amount of fuel delivered to the injection nozzles by controlling the position of the plungers.

Injection pump leakage, injection nozzle overflow and excess fuel from the fuel filter assembly return to the fuel tank through the return lines.

Maintenance

The fuel system is relatively trouble-free and if correctly maintained will usually not require major service repairs between engine overhauls.

Contamination is the most common cause of fuel system problems. Therefore, to ensure best operating results, the fuel must be clean and fuel tanks must be free of contaminants. The single element fuel filter/water separator must be changed according to the Service Guide in the Introduction of this manual or the Maintenance Inspection Schedule on the unit.

NOTE: The injection nozzles should be tested every 10,000 hours when only clean fuel is used and the fuel system is maintained according to the Service Guide. Refer to the TK482 and TK486 Engine Overhaul Manual for injection nozzle testing and repair.

Whenever the fuel system is opened, take the following precautions to prevent dirt from entering the system:

- Cap all fuel lines.

- Work in as clean of an area as possible.
- Complete the work in the shortest possible time.

Any major injection pump or nozzle repairs should be done by a quality diesel injection service shop. The necessary service equipment and facilities are not found in most engine rebuild shops because of the large investment required.

The following procedures can be done under field conditions:

- Bleeding air from the fuel system
- Fuel tank and filter system maintenance
- Prime pump (hand) replacement or repair*
- Transfer pump replacement or repair*
- Injection line replacement*
- Pump and governor adjustments*
- Pump timing
- Nozzle spray pattern testing and adjustment*
- Minor rebuilding of nozzles*

*These procedures are covered in the TK482 and TK486 Overhaul Manual, TK 50136.

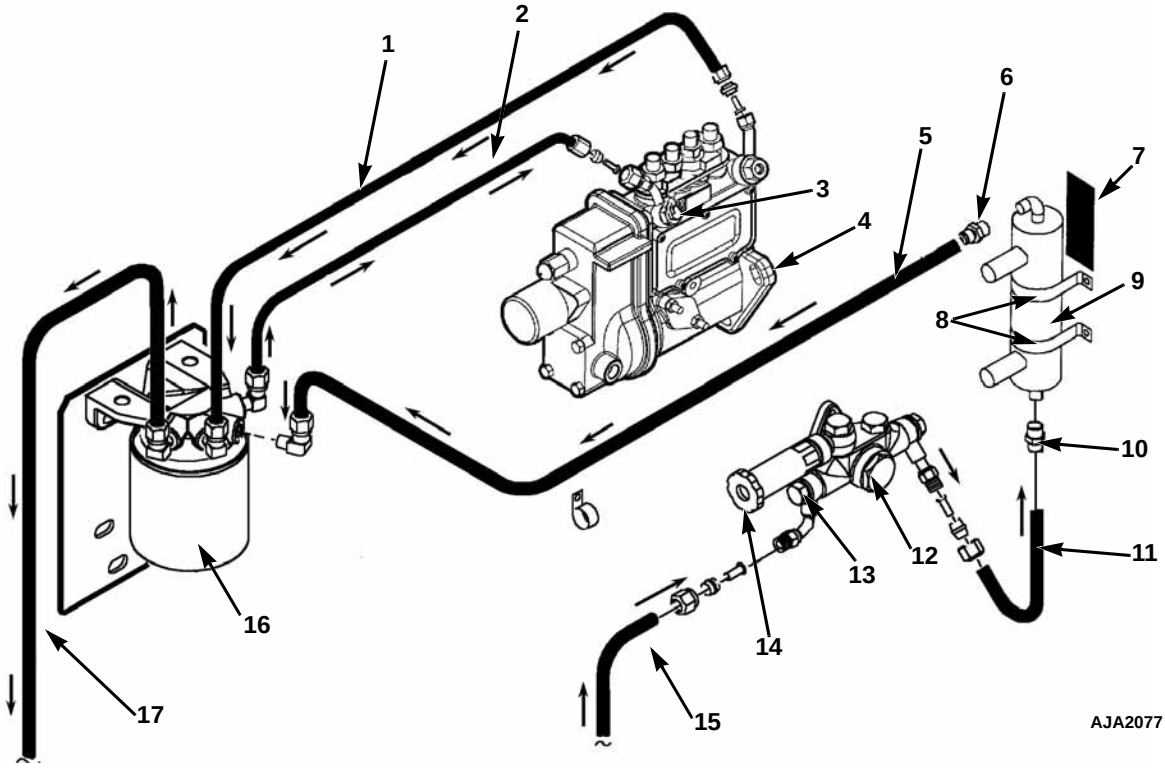

1.	Fuel Return Line	10.	Adapter
2.	Fuel Supply Line to Injection Pump	11.	Hose
3.	Fuel Bleed Screw	12.	Transfer Pump
4.	Injection Pump	13.	Fuel Strainer
5.	Fuel Supply Line to Fuel Filter	14.	Hand Pump
6.	Adapter	15.	Fuel Supply Line
7.	Fuel Heater Pad	16.	Fuel Filter/Water Separator
8.	Fuel Heater Clamp	17.	Fuel Return Line
9.	Fuel Heater		

Figure 50: Fuel System — All Models with Tier 1 Engine

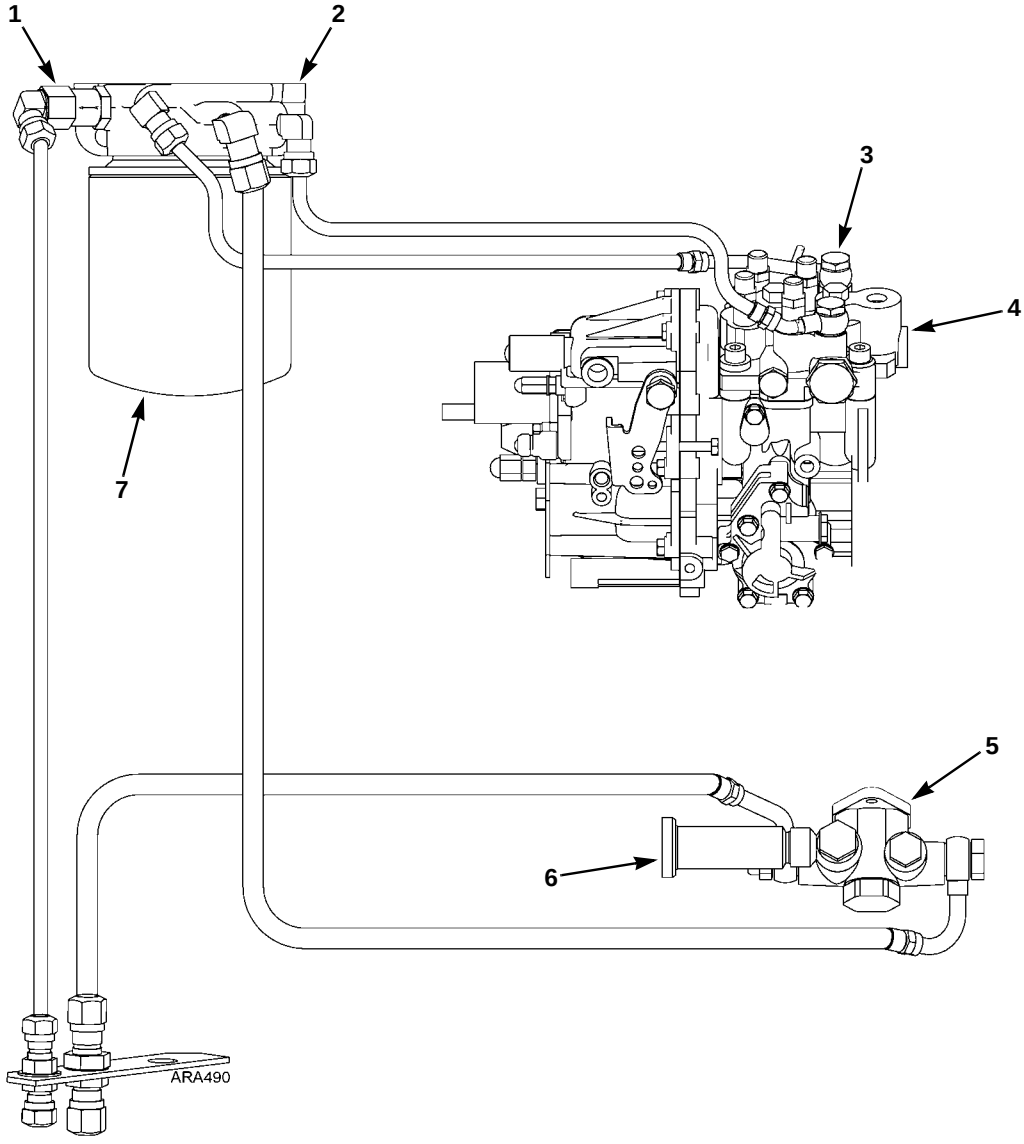

1.	Check Valve (Keeps air from entering fuel system when engine is not running.)	5.	Fuel Transfer Pump
2.	Filter Head	6.	Priming Pump
3.	Bleed Screw	7.	Fuel Filter/Water Separator
4.	Mono-plunger and Distributor Injection Pump		

Figure 51: Fuel System — All Models with Tier 2Engine

Fuel Return Line Replacement

The fuel return lines (hoses) and end cap on the fuel injection nozzles should be changed every 10,000 engine operating hours. The return line kit (P/N 10-368) contains new return lines, clamps, an end cap, and a decal like the one shown below. This decal is was added to production units in January of 2005. The decal is located near the unit serial plate. The date and engine hours must be entered on the decal when the fuel return lines are changed.

ENGINE EQUIPPED WITH SPECIAL TK 10-368 RETURN FUEL HOSES.

Thermo King recommends fuel return hose replacement every 10,000 hours of engine operation.
Use of non-TK special hoses may void warranty.
Total Engine Hours_____ Date_____-_____-_____
ARA532

Figure 52: Fuel Return Line Replacement Decal

Use the following procedure to replace the fuel return lines and end cap.

1. Remove the clamps, the end cap, the short fuel return lines between the injection nozzles, and the long fuel return line from the injection nozzle to the banjo fitting on the injection pump.

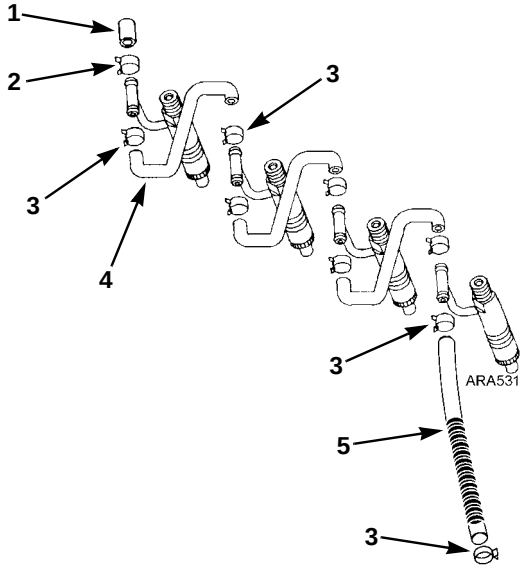

1.	End Cap	4.	Short Fuel Return Lines
2.	Larger Clamp	5.	Long Fuel Return Lines
3.	Smaller Clamps		

Figure 53: Fuel Return Line Replacement

2. Discard the old clamps, end cap, and fuel return lines.
3. Install the end cap and clamp. Note that the end cap has a larger OD than the other hoses and requires the larger clamp.
4. Install the fuel return lines and clamps. It may be necessary to adjust the banjo fitting slightly to obtain the straightest routing for the long return line.
5. Be sure all the fittings are tight and check for leaks.
6. Write the date and engine hours on the decal.

Bleeding the Fuel System

The fuel system must have the air bled out if any of the following circumstances occur:

- If the fuel tank becomes empty
- If repairs are made to the fuel system
- If air gets into the system for any other reason.

NOTE: MAKE SURE the fuel tank vent is kept open. If the vent becomes clogged, a partial vacuum develops in the tank, and this increases the tendency for air to enter the system.

To bleed air from the fuel system:

1. Loosen the bleed screw on the Tier 1 injection pump about two turns. Loosen the bleed screw on the Tier 2 injection pump about one turn.

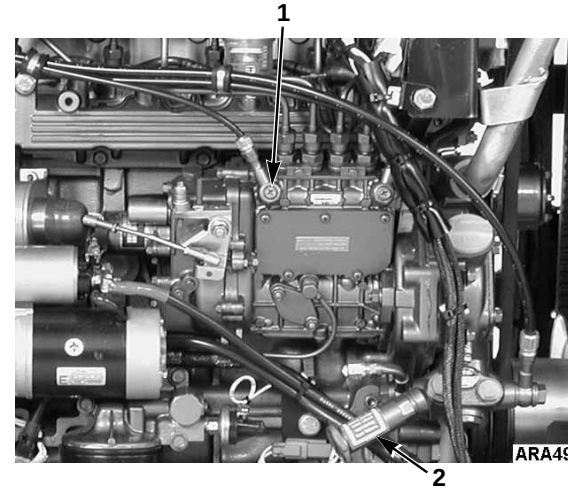

1.	Bleed Screw	2.	Priming Pump

Figure 54: Tier 1 Injection Pump

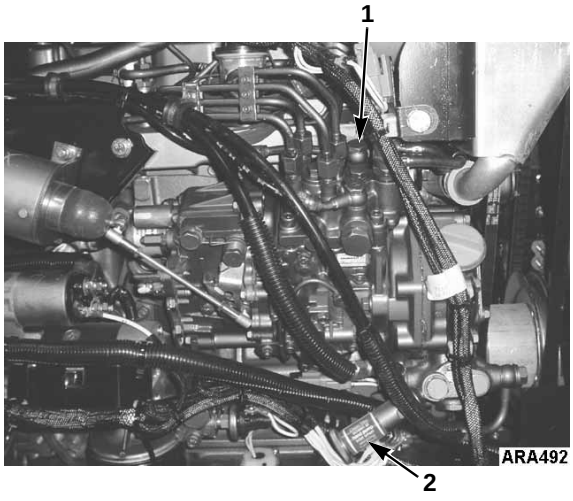

1.	Bleed Screw	2.	Priming Pump

Figure 55: Tier 2 Injection Pump

2. Unscrew the priming pump handle and manually prime the fuel system until air bubbles are no longer visible in the fuel coming out of the bleed screw.
3. Tighten the bleed screw and screw the priming pump handle back in.
4. Loosen the injection lines at the injection nozzles.
5. Crank the engine until fuel appears at the nozzles.
6. Tighten the injection lines.
7. Start the engine and observe the engine run for a few minutes. If the engine fails to start, or starts but stops in a few minutes, repeat the procedure.

Water in the Fuel System

Water in the fuel system can damage the injection pump and nozzles. This damage will subsequently cause more expensive damage to the engine. A large accumulation of water in the bottom of the fuel tank will stop a diesel engine. Water should be drained off during scheduled maintenance inspections. Let the tank set idle for an hour before removing the drain plug from fuel tank. Let water and fuel drain into a container until only fuel is draining from tank. Replace drain plug. DO NOT steam clean fuel tank caps.

NOTE: Some fuel tanks have a check valve in the drain plug fitting. Push the check valve open with a small screw driver to drain water and fuel.

Single Element Fuel Filter/Water Separator Replacement

A single element fuel filter/water separator removes contaminates and water from the fuel. Two orifices in the filter head control the pressure in the fuel system by allowing a certain amount of fuel to return to the tank. One orifice is located in the center of the filter head. It bleeds off water and returns it to the fuel tank. The other orifice is located off-center on the filter head and bleeds off air.

1. Unscrew the filter using a strap wrench. Drain filter. Properly dispose of fuel and filter.
2. Fill the new filter with clean fuel through one of the small openings in the top of the filter body. Do not use the center hole to add fuel to the filter or unfiltered fuel may reach the injection pump. Filling the filter with fuel purges air from the filter.
3. Clean the filter head seal surface. Lubricate filter seal with clean fuel.
4. Hand tighten the filter. Then tighten 1/4 turn more using a strap wrench.

Draining Water from Fuel Tank

Water run through the system may damage the injection pump or nozzles. Damage to the fuel system will subsequently cause more expensive damage to the engine. A large accumulation of water in the bottom of the fuel tank will stop a diesel engine. Water should be drained off during scheduled maintenance inspections to prevent breakdowns. Drain the water off after the fuel tank and unit have remained idle for an hour.

1. Place a container under the fuel tank to catch the draining water and fuel.
2. Remove the drain plug from the bottom of the fuel tank.

NOTE: Some fuel tanks have a check valve in the drain plug fitting. Push the check valve open with a small screw driver to drain the tank.

3. Let the water and fuel drain into the container until no water is visible in the fuel draining from the tank. If the water and fuel do not drain freely, the vent may be plugged. If so, clean or replace the vent.
4. Install the drain plug.

Engine Speed Adjustment

When the diesel engine fails to maintain the correct engine speed, check the following before adjusting the speed:

1. Bleed the air out of the fuel system. Check the speed.
2. Bleed the air out of the nozzles. Check the speed.

Adjustment Procedure

NOTE: The speed of the engine should be checked with a hand tachometer, TK P/N 204-220, on the crankshaft pulley bolt or by the use of a stroboscope tachometer, TK P/N 204-436

Make the engine speed adjustments with the engine fully warmed up.

1. Start the unit and check the speed rpm. The engine speed should be 1800 ± 10 RPM at Full Load (60 Hz alternator output); 1890 ± 10 RPM at No Load.
2. Loosen the jam nut on the speed adjustment screw.
3. Adjust the screw to change engine RPM.
4. Tighten the jam nut, when the speed is correct.

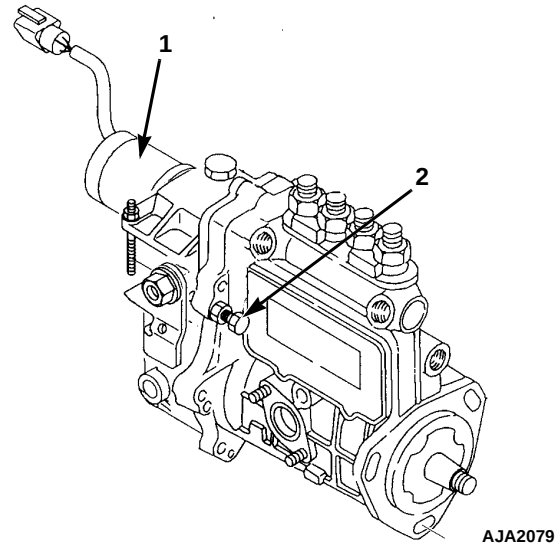

1.	Fuel Solenoid
2.	Low Speed Adjustment Screw

Figure 56: Engine Speed Adjustment Tier 1 Engine

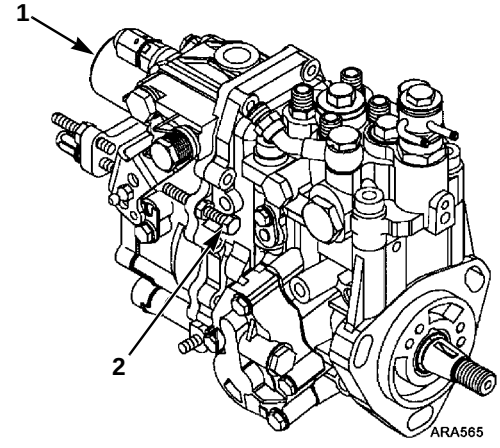

1.	Fuel Solenoid
2.	Low Speed Adjustment Screw

Figure 57: Engine Speed Adjustment Tier 2 Engine

Integral Fuel Solenoid

The fuel solenoid contains 2 coils: the pull-in coil, and the hold-in coil. The pull-in coil draws approximately 35 to 45 amperes at 12 volts. The hold-in coil draws approximately 1 ampere at 12 volts. The pull-in coil must be energized to move the injection pump governor linkage to the fuel “ON” position. Once the governor linkage is in the fuel “ON” position, the hold-in coil will keep the linkage in the fuel on position until the 8D circuit is de-energized. The pull-in coil must be de-energized after a few seconds to keep it from being damaged.

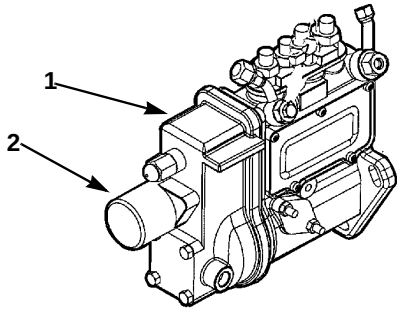

1.	Injection Pump
2.	Fuel Solenoid

Figure 58: Fuel Solenoid

A fuel solenoid timer printed circuit board contains the timer and relay that control the pull-in coil in the fuel solenoid. Refer to the parts manual for the correct printed circuit board for your unit.

Diagnosing the Integral Fuel Solenoid System

NOTE: The fuel solenoid pull-in coil may require 35 to 45 amperes to pull the solenoid plunger in. The unit’s battery must be in good condition. If the battery has enough power to crank the engine over, it has enough power to energize the fuel solenoid pull-in coil.

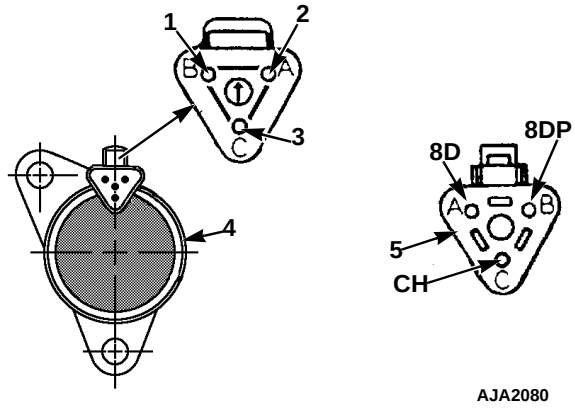

1.	Pin B: White (8DP) Wire
2.	Pin A: Red (8D) Wire
3.	Pin C: Black (CH) Wire
4.	Fuel Solenoid and Connector
5.	Main Wire Harness Connector and Pins: Pin A = 8D Pin B = 8DP Pin C = CH

Figure 59: Integral Fuel Solenoid Harness Connections

If you suspect that the engine does not operate because the fuel solenoid is not operating correctly, use the following procedure:

1. Disconnect wire 8S from the starter solenoid.
2. Disconnect the fuel solenoid wire connector from the main wire harness.
3. Place the Unit On/Off switch in the “ON” position.
4. Check the voltage on 8D circuit in the main wire harness connector for the fuel solenoid. Refer to Figure 59 or the unit wiring diagram to identify the pins in the wire harness and fuel solenoid connectors.
   a. If battery voltage is not present on the 8D circuit, check the 8D circuit and related components for a fault.
   b. If battery voltage is present on the 8D circuit, go to step 5.
5. Check CH circuit in the main wire harness at the fuel solenoid connector for continuity to a good chassis ground.

a. If there is no continuity between CH circuit and a good chassis ground, check the CH wire for an open circuit.

b. If there is continuity between CH circuit and a good chassis ground, go to step 6.

6. Place a jumper wire between the CH circuit in the connector on the fuel solenoid and a good chassis ground.

7. Test the pull-in coil by momentarily placing a jumper between the 8DP circuit pin in the connector on the fuel solenoid and terminal 2 at the fuse link. The fuel solenoid should make a definite click when the pull-in coil is energized. It should click again when the pull-in coil is de-energized.

NOTE: The pull-in coil may draw 35 to 45 amperes so do not leave the jumper connected to pin 8DP for more than a few seconds.

a. If the pull-in coil does not energize, check the resistance of the pull-in coil by placing an ohmmeter between 8DP circuit and the CH circuit in the connector on the fuel solenoid. The resistance of the pull-in coil should be 0.2 to 0.3 ohms. Replace the fuel solenoid if the resistance of the pull-in coil is not in this range.

NOTE: If the pull-in coil fails, make sure to replace the fuel solenoid relay with the correct relay. Refer to unit parts manual.

b. If the pull-in coil does energize, go to step 8.

8. Test the hold-in coil.

a. Energize the hold-in coil by placing a jumper between the 8D circuit in the connector to the fuel solenoid and terminal 2 at the fuse link.

b. Momentarily energize the pull-in coil by placing a jumper between the 8DP circuit in the connector to the fuel solenoid and terminal 2 at the fuse link. The fuel solenoid should make a definite click when the pull-in coil is energized, but should not click when the pull-in coil is de-energized.

c. De-energize the hold-in coil by removing the jumper from the 8D circuit and terminal 2. The fuel solenoid should make a definite click when the hold-in coil is de-energized.

d. If the hold-in coil does not function properly, check the resistance of the hold-in coil by placing an ohm-meter between the 8D circuit and the CH circuit in the connector to the fuel solenoid. The resistance of the hold-in coil should be 24 to 29 ohms. If the resistance of the hold-in coil is not in this range, replace the fuel solenoid.

e. If the hold-in coil does function properly, go to step 9.

9. Reconnect the main wire harness connector to the fuel solenoid connector.

10. Remove the fuel solenoid relay from its socket and make sure the unit On/Off switch is in the “ON” position.

11. Check the voltage on the 8D circuit at terminal 85 in the fuel solenoid relay socket. Refer to the illustration below to identify the terminals in the relay socket.

a. If battery voltage is not present on the 8D circuit, check the 8D circuit and related components for a fault.

b. If battery voltage is present on the 8D circuit, go to step 12.

12. Check the voltage on the 2A or 2B circuit at terminal 30 in the fuel solenoid relay socket.

a. Check circuit 2A or 2B for an open or a short if battery voltage is not present on the 2A or 2B circuit.

b. Go to step 13 if battery voltage is present on circuit 2A or 2B.

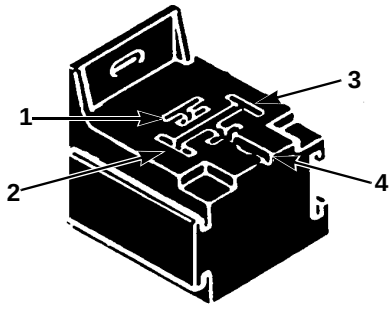

AJA2081

1.	87 Terminal/8DP Wire
2.	85 Terminal/8D Wire
3.	86 Terminal/8DC Wire
4.	30 Terminal/2A or 2B Wire

Figure 60: Relay Socket Terminal Identification — Integral Fuel Solenoid

13. Test the relay.
    a. Connect the 85 terminal on the relay to terminal 2 at the fuse link using a jumper.
    b. Connect the 86 terminal on the relay to a CH circuit use another jumper.
    c. The relay is defective if it does not energize. Replace the relay.
    d. If the fuel solenoid does energize, the timer is defective. Replace the fuel solenoid timer PC board.
14. Turn the unit off.
15. Connect wire 8S to the starter solenoid.

Fuel Solenoid Replacement

1. Disconnect wire 8S from the starter solenoid.
2. Disconnect the fuel solenoid wire connector.
3. Remove the old fuel solenoid.
4. Connect the main harness connector to the new fuel solenoid.
5. Place the Unit On/Off switch in the “ON” position to energize the fuel solenoid.

NOTE: The fuel solenoid must be energized when it is being installed. If it is not, the plunger and the linkage may not line up correctly.

6. Place the O-ring in the groove in the end of the fuel injection pump. Make sure that the O-ring is positioned correctly during installation to avoid damage and leaks.
7. Install the new fuel solenoid.
8. Turn the unit Off.
9. Connect wire 8S to the starter solenoid.

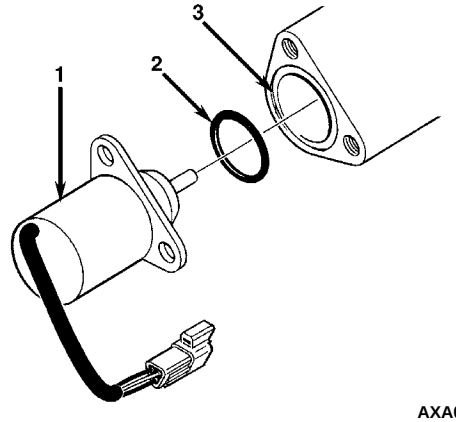

AXA0298

1.	Integral Fuel Solenoid
2.	O-ring
3.	Fuel Injection Pump Groove

Figure 61: Integral Fuel Solenoid Components

Injection Pump Service and Timing

Injection Pump Removal

The injection pump drive gear will not fit through the gear housing when removing the pump. The gear must be separated from the pump using tool P/N 204-1011. When this tool is used, it is not necessary to remove the water pump belt, fuel pump, crankshaft pulley, crankshaft seal or front plate. See Figure 66 “Injection Pump Gear Tool” on page 98.

1. Note the alignment of the index marks on the injection pump and the gear case. On the Tier 1 engine, the index mark on the injection pump is usually aligned with the center (long) index mark on the gear case. On the Tier 2 engine, the index mark on the injection pump is usually aligned with the single index mark on the gear case. If not, mark it so the injection pump can be returned to the same position when it is reinstalled.

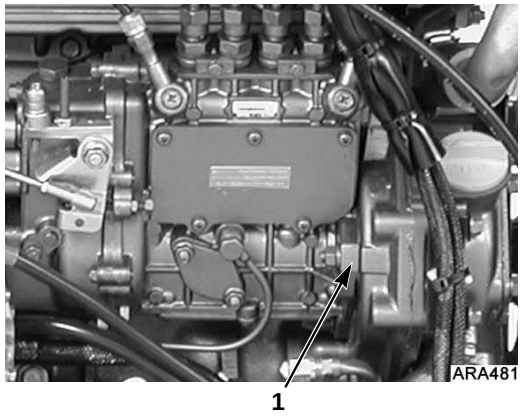

1.	Index Marks

Figure 62: Tier 1 Index Mark Location

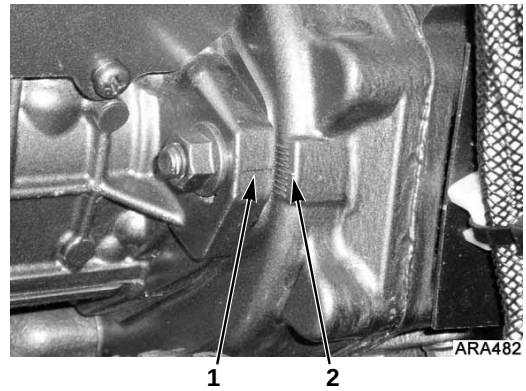

1.	Index Mark on Injection Pump
2.	Center Index Mark on Gear Case

Figure 63: Tier 1 Index Mark Alignment

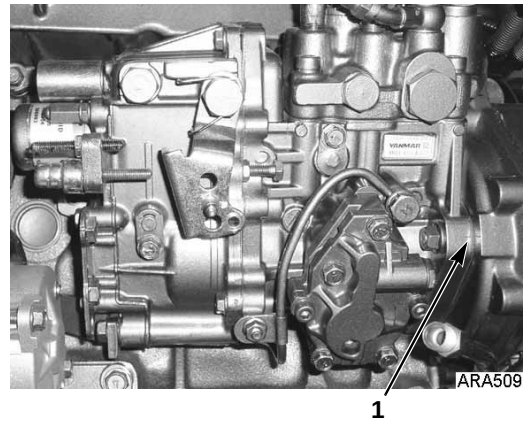

1.	Index Marks

Figure 64: Tier 2 Index Mark Location

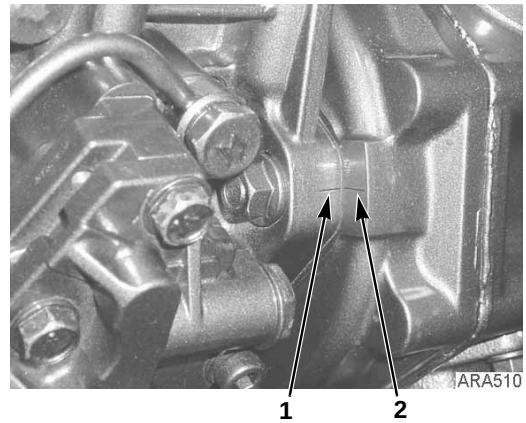

1.	Index Mark on Injection Pump
2.	Index Mark on Gear Case

Figure 65: Tier 2 Index Mark Alignment

2. Remove the starter for clearance. Also remove the fuel lines, harness and mounting hardware from the injection pump. Cover all injection lines and fuel lines with plastic covers or tape. The smallest amount of dirt can damage the fuel system.

3. Remove the cover plate from the gear case. Remove the nut and lockwasher that secure the gear to the injection pump shaft. Use a shop rag to prevent the lock washer or nut from falling into the gear case.

   NOTE: The injection pump gear assembly is made of three pieces; the flange, the gear, and the transfer pump cam. Do not loosen or remove the four bolts that fasten the gear to the flange because that changes the timing.

4. Use the hardware from the cover plate to attach the tool plate (P/N 204-1011) to the gear case. Attach the plate with the marked side pointing up and out away from the case.

5. Align the threaded holes in the injection pump gear with the two holes in the tool plate by rotating the engine crankshaft. Attach the gear to the tool plate with the screws provided with the tool plate.

6. Thread the long screw into the small end of the adapter (both parts are supplied with the tool plate). Insert the adapter into the tool plate. Carefully align the screw over the center of the injection pump shaft. Then rotate the screw to force the injection pump shaft from the gear.

7. Remove the screw and adapter, leaving the tool plate in position. This holds the gear in the proper tooth alignment until the injection pump is re-installed.

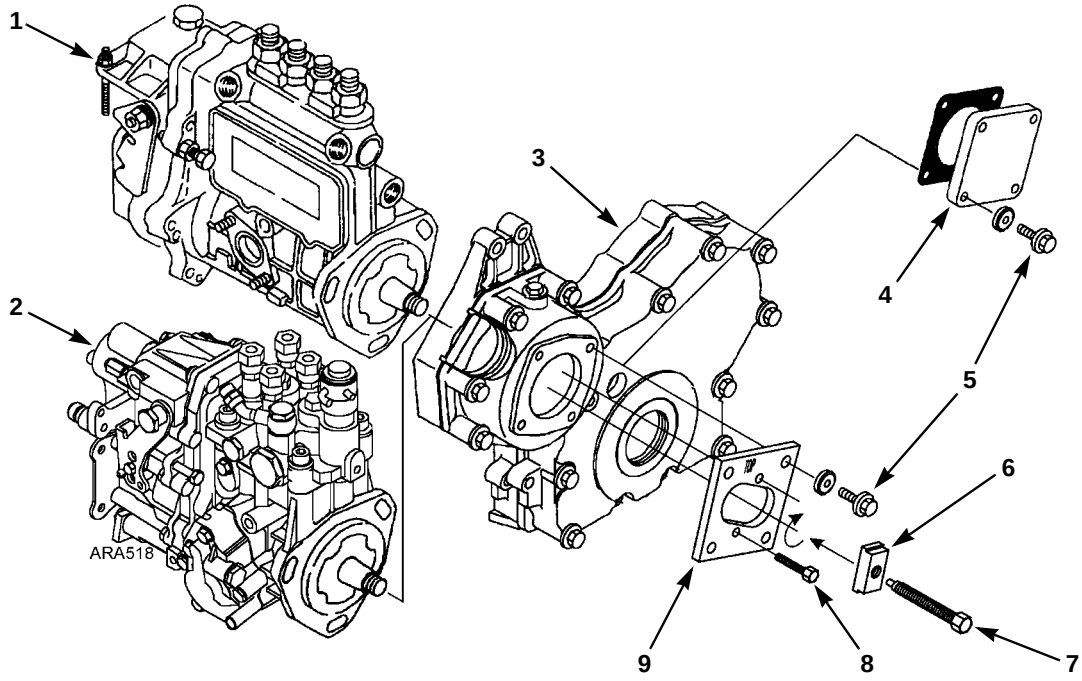

1.	Tier 1 Injection Pump	6.	Adapter (Tool)
2.	Tier 2 Injection Pump	7.	Tool Long Screw (Tool)
3.	Gear Case	8.	Tool Short Screw (Tool)
4.	Cover Plate	9.	Tool Plate (Tool)
5.	Cover Plate Bolt		

Figure 66: Injection Pump Gear Tool

Injection Pump Installation

1. Rotate the injection pump shaft to align the key with the keyway in the gear. Take care to make sure the key mates with the keyway. Then insert the injection pump shaft into the gear.
2. Fasten the injection pump to the gear case using the correct hardware. Make sure to align the index marks on the injection pump and the gear case like they were in step 1 of “Injection Pump Removal”.

   NOTE: If a different injection pump is being installed, see the appropriate injection pump timing procedure to set the timing.
3. Remove the screws that hold the gear to the tool plate and remove the tool plate.
4. Fasten gear to injection pump shaft with a lock washer and nut. Use a shop rag to prevent the lock washer or nut from falling into the gear case. Torque the nut to 43 to 51 ft-lb (59 to 69 N•m) on the Tier 1 engine, or 58 to 65 ft-lb (78 to 88 N•m) on the Tier 2 engine.
5. Fasten the cover plate to the gear case. Install the fuel lines, harness and mounting hardware from the injection pump. Also install the starter.

Injection Pump Timing Tier 1 Engine

This timing procedure requires fuel pressure at the injection pump inlet. This can be accomplished by pumping the priming pump by hand, or by using an electric fuel pump to supply fuel to the fuel pump inlet.

1. Place the Unit On/Off switch in the “OFF” position.
2. Remove the round cover (plug) from the timing mark access hole on the front of the bell housing. The index marks on either side of this hole and the timing marks on the flywheel are used to check the injection pump timing.

   WARNING: Loosen all of the injection lines at the injection nozzles to prevent the possibility of the engine firing while it is being rotated.

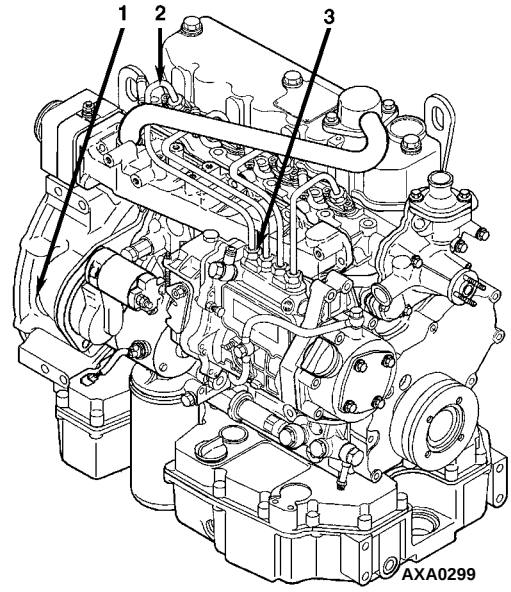

1.	Timing Mark Access Hole
2.	Number One Cylinder Injection Line
3.	Number One Cylinder Delivery Valve Holder

Figure 67: Component Locations

3. Remove the injection line for the number one cylinder from the injection nozzle and from the delivery valve on the injection pump.

NOTE: The number one cylinder is the cylinder at the flywheel end of the engine.

4. Remove the rocker arm cover.
5. Place the engine at top dead center of the compression stroke for the number one cylinder.
   a. Rotate the engine in the normal direction of rotation (clockwise viewed from the water pump end) until the 1-4 timing mark on the flywheel lines up with the index mark in the timing mark access hole.
   b. Check the rocker arms on the number one cylinder to see if they are loose.
   c. If the rocker arms are loose, the engine is at top dead center of the compression stroke for the number one cylinder.

d. If the rocker arms are tight, the engine is at top dead center of the exhaust stroke for the number one cylinder. Rotate the engine 360 degrees to place the engine at top dead center of the compression stroke for the number one cylinder.

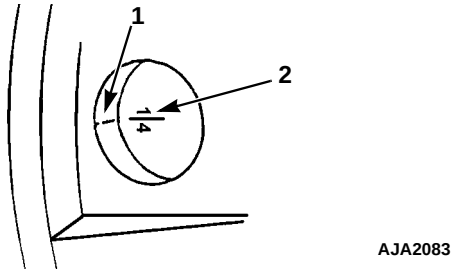

1.	Index Mark
2.	Top Dead Center Mark for Cylinders 1 and 4

Figure 68: Top Dead Center Marks

6. Energize the fuel solenoid:

WARNING: The µP-G controller may start the unit at any time when the unit On/Off switch is "ON". Disconnect the 8S wire from the starter solenoid to prevent the engine from cranking.

a. Disconnect the 8S wire from the starter solenoid to prevent the controller from cranking the engine. Then place the On/Off switch in the "ON" position.

b. If the engine is not in the unit, use jumper wires to energize the fuel solenoid at the three pin fuel solenoid connector. Place a jumper between the black wire (CH wire, pin C) and the negative terminal of a 12 Vdc power source. Place a jumper between the red wire (8D wire, pin A) and the positive terminal of a 12 Vdc power source. Then momentarily place a jumper between the white wire (8DP wire, pin B) and the positive terminal of a 12 Vdc power source.

CAUTION: Do not leave the jumper on the white wire (8DP wire, pin B) more than a few seconds or the fuel solenoid will be damaged.

7. Rotate the engine backwards (counterclockwise viewed from the water pump end) until the 10 degree BTDC (before top dead center) timing mark is positioned in the bottom of the timing mark access hole. There are two injection timing marks. The 10 degree BTDC timing mark is a horizontal line stamped on the flywheel approximately 25 mm (1.0 in.) before the top dead center mark.The 12 degree BTDC timing mark is a horizontal line stamped on the flywheel approximately 30 mm (1.2 in.) before the top dead center mark.

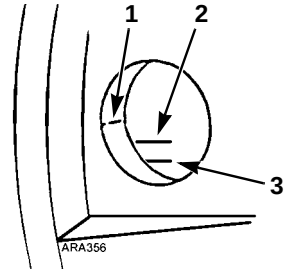

1.	Index Mark
2.	12 Degree BTDC Timing Mark
3.	10 Degree BTDC Timing Mark

Figure 69: Timing Mark Alignment

8. Pump the priming pump by hand a few times, or energize the electric fuel pump if an electric fuel is being used.

9. Use a clean towel to remove the fuel from the top end of the delivery valve holder.

10. Slowly turn the engine in the normal direction of rotation until you see the fuel rise in the end of the delivery valve holder. Stop as soon as you see the fuel rise.

11. Check position of the timing marks. The 10 degree BTDC timing mark on the flywheel should be aligned with the index mark on the side of the timing mark access hole. Repeat steps 7 through 11 to recheck the timing.

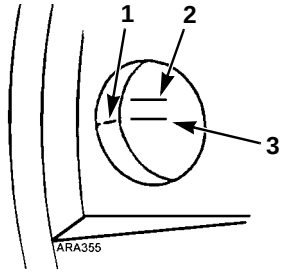

1.	Index Mark
2.	12 Degree BTDC Timing Mark
3.	10 Degree BTDC Timing Mark

Figure 70: Correct Injection Timing Mark Alignment

12. If the timing is off by more than 1 degree (2.5 mm [0.1 in.]), loosen the mounting nuts on the studs that fasten the injection pump to the engine and rotate the injection pump to change the timing.
    a. Pull the top of the injection pump away from the engine to advance the timing.
    b. Push the top of the injection pump toward the engine to retard the timing.
13. Tighten the injection pump mounting nuts and recheck the timing. Repeat steps 7 through 12 until the timing is correct.
14. Install the cover in the timing mark access hole, install the injection line for the number one cylinder. Install the rocker arm cover, tighten the other injection lines, and reconnect the 8S wire when finished with the procedure.

Injection Pump Timing Tier 2 Engine

Use this timing procedure when installing a new injection pump on a Tier 2 engine. It is not necessary to use this timing procedure when removing and reinstalling the original injection pump. In that case, align the index marks on the injection pump and the gear case as they were before removing the injection pump.

1. Before removing the old injection pump, note the alignment of the index marks on the injection pump and the gear case. The index mark on the injection pump is usually aligned with the index mark on the gear case. If not, make a mark on gear case in line with the index mark on the injection pump (see Figure 73).

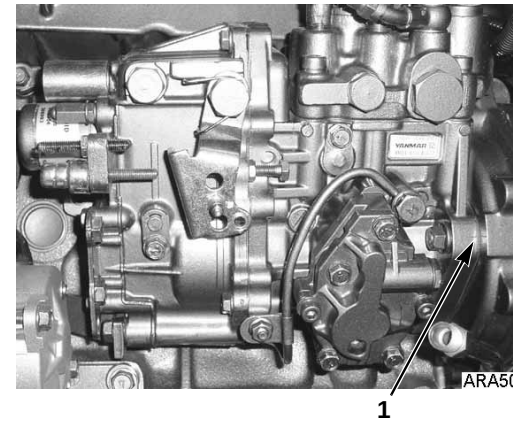

1.	Index Marks

Figure 71: Tier 2 Index Mark Location

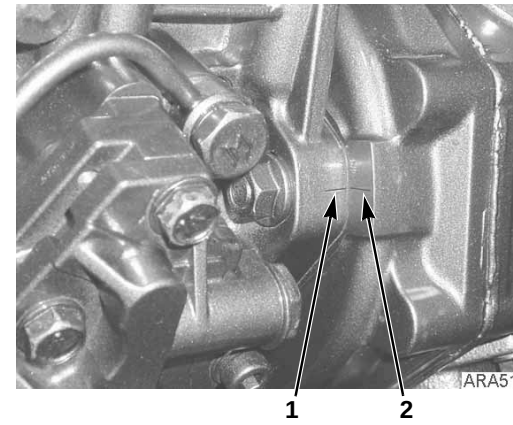

1.	Index Mark on Injection Pump
2.	Index Mark on Gear Case

Figure 72: Tier 2 Index Mark Alignment

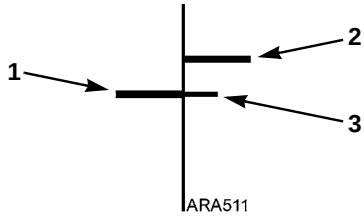

1.	Index Mark on Injection Pump
2.	Existing Index Mark on Gear Case
3.	Make New Mark on Gear Case If Needed

Figure 73: Marking Gear Case

2. Clean the area with brake cleaner or something similar. Place an injection angle sticker on the gear case so the center line on the sticker is aligned with the index mark on the injection pump. An injection angle sticker is provided with the new injection pump.

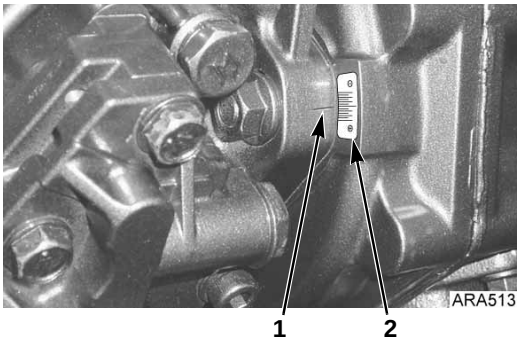

1.	Index Mark on Injection Pump
2.	Injection Angle Sticker

Figure 74: Place Injection Angle Sticker on Gear Case

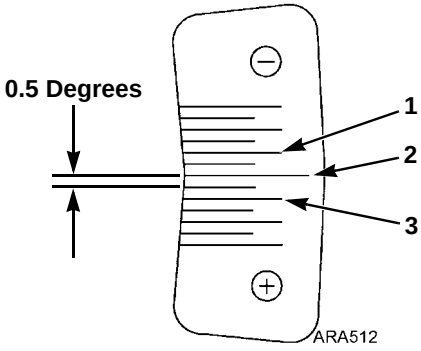

1.	–1.0 Degrees Mark
2.	Center Line (0 Degrees Mark)
3.	+1.0 Degrees Mark

Figure 75: Injection Angle Sticker

3. Remove the old injection pump. Use the injection pump gear tool P/N 204-1011 to remove the injection pump gear without removing the timing gear cover (see “Injection Pump Removal”).

   NOTE: Remove the injection pump gear by removing the nut and lock washer that secure the injection pump gear assembly to the injection pump shaft. The injection pump gear assembly is made of three pieces; the flange, the gear, and the transfer pump cam. Do not loosen or remove the four bolts that fasten the gear to the flange because that changes the timing.

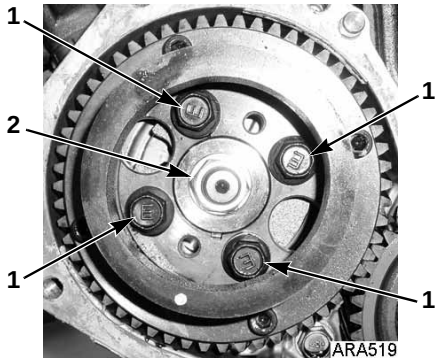

1.	Do Not Loosen or Remove These Four Bolts
2.	Remove Nut and Lock Washer

Figure 76: Removing Injection Pump Gear

4. Record the injection angle marked on the old injection pump (see the following photographs). The injection angle mark is located on the side of the pump facing the engine. The injection angle mark on the pump does not use a decimal point. Add a decimal point before the last digit of the injection angle mark to get the injection angle. The injection angle mark in the following photographs is 67. That equals an injection angle of 6.7 degrees.

Examples	
Injection Angle Mark	Injection Angle
67	6.7 Degrees
85	8.5 Degrees

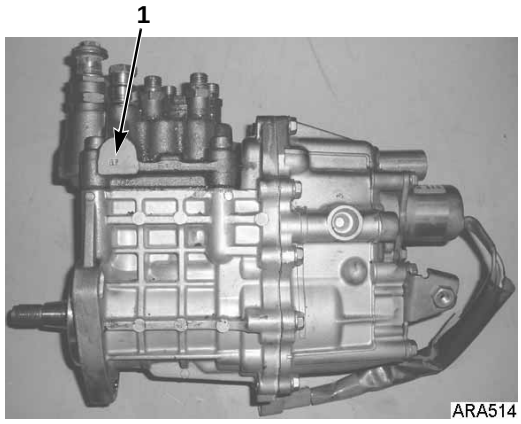

1.	Injection Angle Mark

Figure 77: Injection Angle Mark Location

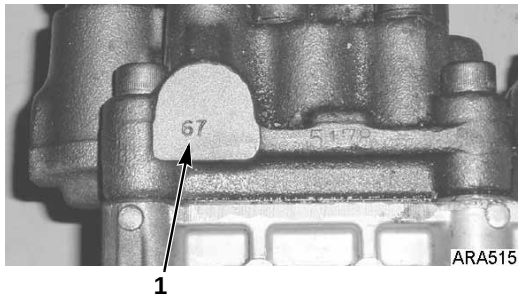

1.	Injection Angle Mark

Figure 78: Injection Angle Mark

NOTE: If you cannot read the injection angle mark, contact Yanmar (e-mail both Koichi Sawada at koichi_sawada@yanmar.co.jp and Hisashi Hamada at hisashi_hamada@yanmar.co.jp) with the injection pump serial number or the engine serial number and they will provide the injection angle. The injection pump serial number is located on the bottom of the sticker on the injection pump.

1.	Injection Pump Serial Number

Figure 79: Injection Pump Serial Number Location

5. Record the injection angle marked on the side of the new injection pump.
6. Calculate the injection angle difference by subtracting the injection angle of the old injection pump from the injection angle of the new injection pump.

Examples		
Injection Angle of New Injection Pump (Degrees)	8.5	6.1
– Injection Angle of Old Injection Pump (Degrees)	– 6.7	– 6.7
= Injection Angle Difference (Degrees)	= +1.8	= –0.6

7. Install the new injection pump on the gear case and position it so the index mark on the injection pump is aligned with the mark equal to the injection angle difference on the injection angle sticker (see the following examples). Tighten the injection pump mounting nuts when the index mark is aligned as necessary with the injection angle sticker.

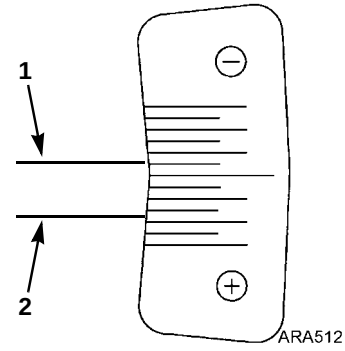

1.	Injection Pump Index Mark at –0.6 Degrees
2.	Injection Pump Index Mark at +1.8 Degrees

Figure 80: Examples of Injection Pump Index Mark Alignment with Injection Angle Sticker

8. Install the injection pump gear, lock washer, and nut. Torque the nut to 58 to 65 ft-lb (78 to 88 N•m).

NOTE: If the timing gear cover was removed to remove the injection pump gear, make sure the timing marks on the timing gears are aligned as shown below. It helps to install the idler gear last when aligning the timing marks.

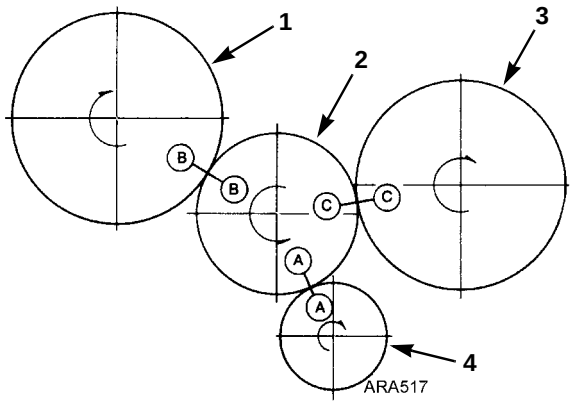

1.	Fuel Injection Pump Gear
2.	Idler Gear
3.	Camshaft Gear
4.	Crankshaft Gear

Figure 81: Timing Mark Alignment

NOTE: The oil pump is located in the timing gear cover on Tier 2 engines. The inner rotor of the oil pump fits around the crankshaft gear. Make sure that the flat sides of the inner rotor are aligned with the flat sides on the crankshaft gear when installing the timing gear cover.

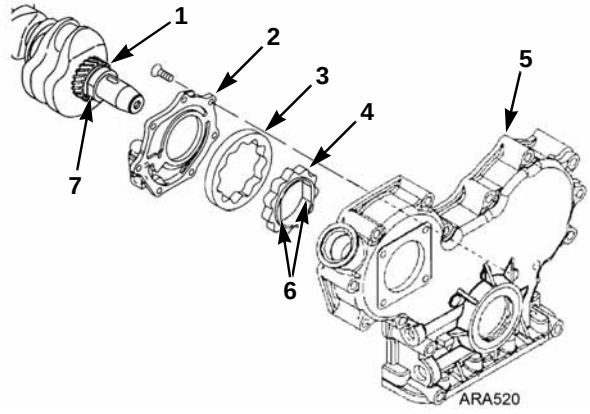

1.	Crankshaft Gear
2.	Oil Pump Cover
3.	Outer Rotor
4.	Inner Rotor
5.	Timing Gear Cover
6.	Flat Sides on Inner Rotor
7.	Flat Side on Crankshaft Gear

Figure 82: Align Flat Sides of Crankshaft Gear with Flat Sides of Inner Rotor in Timing Gear Cover

Trochoid Feed Pump Tier 2 Engine

The Tier 2 engine has a trochoid feed pump on the fuel injection pump. The trochoid feed pump supplies fuel to the injection pump at a pressure of 450 to 600 kPa (65 to 87 psi). Check the outlet pressure of the trochoid feed pump by removing the plug and attaching a pressure gauge to the port shown below. The plug has M12x1.25 threads. You will have to make an adaptor to attach a pressure gauge. Replace the trochoid feed pump if the outlet pressure is below 410 kPa (59 psi) or above 650 kPa (94 psi).

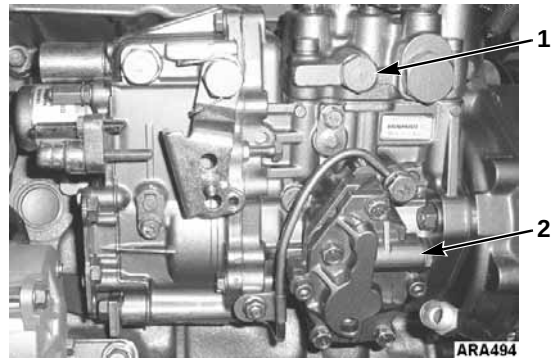

1.	Trochoid Feed Pump Outlet Pressure Port
2.	Trochoid Feed Pump

Figure 83: Trochoid Feed Pump Location

If the seal in the trochoid feed pump fails, it could allow some fuel to leak into the engine oil. A faulty injection nozzle or fuel transfer pump can also dilute the engine oil with fuel. Replace the trochoid feed pump if the engine oil is being diluted with fuel and a faulty injection nozzle or fuel transfer pump is not the cause.

Use the following procedure to replace the trochoid feed pump.

1. Remove the four hex head screws that attach the trochoid feed pump to the injection pump. Do not remove the two Allen head screws.

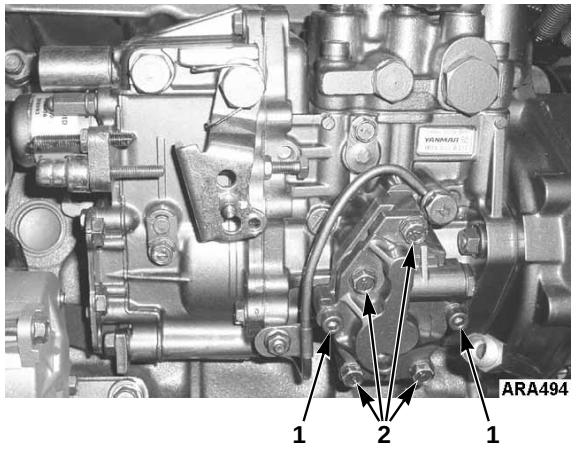

1.	Allen Head Screws (Do Not Remove)
2.	Hex Head Screws

Figure 84: Trochoid Feed Pump Removal

2. Remove the trochoid feed pump from the injection pump.

   NOTE: The gear on the trochoid feed pump is lubricated with engine oil. Some engine oil might leak out of the injection pump when the trochoid feed pump is removed. The trochoid feed pump does not need to be timed when it is installed.Clean the area on the injection pump from which the trochoid feed pump was removed.

3. Place new O-rings on the new trochoid feed pump and make sure it is clean.

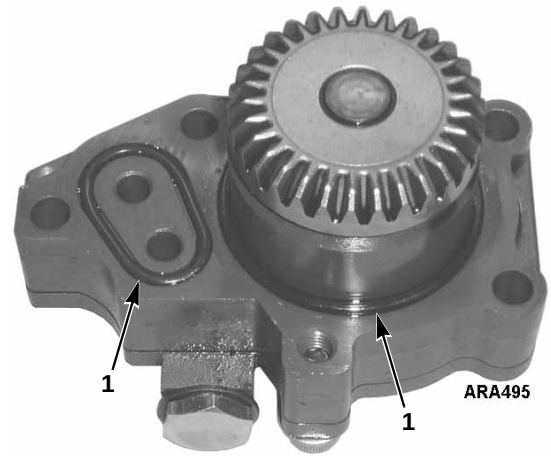

1.	O-Rings

Figure 85: Trochoid Feed Pump

4. Place the new trochoid feed pump on the injection pump.

5. Install and tighten four hex head screws that attach the trochoid feed pump to the injection pump. Torque the hex head screws to 8 to 10 N•m (6 to 7 ft-lb).

Cold Start Device Tier 2 Engine

The Tier 2 engine has a cold start device located on the fuel injection pump. The cold start device has a plunger that retracts at engine coolant temperatures below 5 C (41 F) to advance the injection timing approximately 2 degrees. The plunger controls the position of a piston in the injection pump to change the timing. The plunger is extended and the injection timing is normal at engine coolant temperatures above 5 C (41 F). Check the operation of the cold start device if it is difficult to start the engine in cold weather.

NOTE: Do not pull the plunger out of a cold start device because that will damage it.

1.	Plunger (Extended)

Figure 86: Cold Start Device

Checking Cold Start Device Operation

Use the following procedure to check the operation of the cold start device. The engine coolant temperature must be below 0 C (32 F) to start the procedure.

1. Place the On/Off switch in the On position.

2. Press the **Gauges** key before the engine starts and check the coolant temperature to make sure it is below 0 C (32 F).
3. Let the engine start, then use the **Gauges** key to check the engine rpm. The engine rpm should be approximately 100 rpm higher than normal (see Specifications).
4. Let the engine run to warm up and use the **Gauges** key to check the coolant temperature and engine rpm. When the coolant temperature rises above 5 C (41 F), the engine rpm should drop back to normal. Replace the cold start device if the engine rpm does not drop approximately 100 rpm when the engine warms up.

Cold Start Device Replacement

1. Drain the engine coolant.
2. Remove the banjo bolt that fastens the engine coolant fitting to the cold start device. Use a backup wrench on the cold start device if necessary.

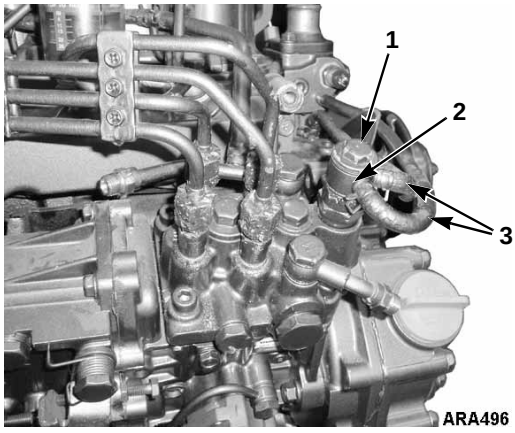

1.	Banjo Bolt
2.	Engine Coolant Fitting
3.	Coolant Hoses to Cold Start Device

Figure 87: Remove Engine Coolant Fitting

3. Remove the cold start device from the injection pump fitting. Use a backup wrench on the injection pump fitting if necessary.

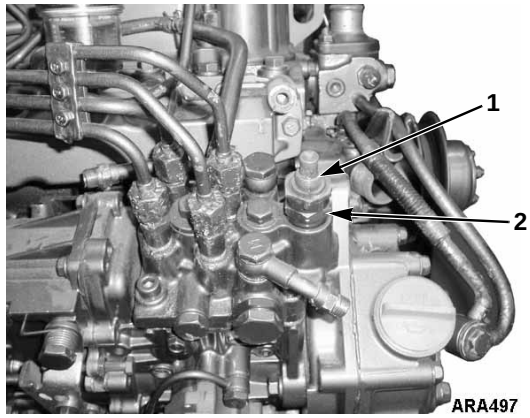

1.	Cold Start Device
2.	Injection Pump Fitting

Figure 88: Remove Cold Start Device

4. Make sure the piston inside the injection pump fitting is clean.

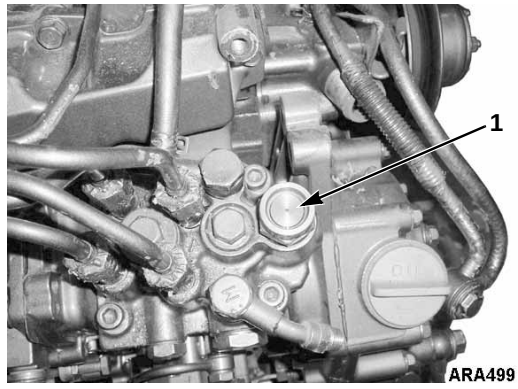

1.	Piston

Figure 89: Clean Piston

5. Install the new cold start device with a new O-ring in the injection pump fitting. Torque the cold start device to 30 to 35 N•m (22 to 26 ft-lb).
6. Install the coolant fitting and banjo bolt on the cold start device. Torque the banjo bolt to 22 to 25 N•m (16 to 18 ft-lb).
7. Refill the engine cooling system and make sure to bleed the air from the cooling system.

Adjusting Engine Valve Clearance

Valve clearance should be checked as required. It is very important that valves be adjusted to the correct specifications for satisfactory engine operation. Insufficient valve clearance will result in compression loss and misfiring of cylinders. This will result in burned valves and seats. Excessive valve clearance will result in noisy valve operation and abnormal wear of the valves and rocker arms. The intake and exhaust valves are adjusted with the valve in the closed position.

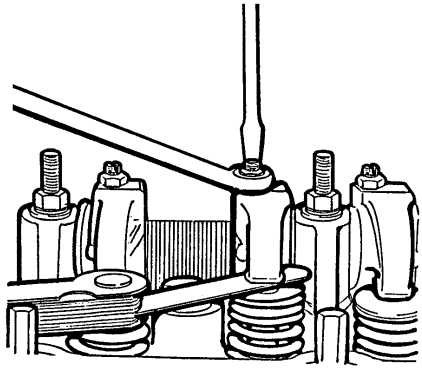

AXA0304

Engine	Rear						Front	
Cylinder No.	**1**		**2**		**3**		**4**	
Valve Arrangement	E	I	E	I	E	I	E	I
Piston in No. 1 cylinder is at TDC on compression stroke	O	O		O	O			
Piston in No. 4 cylinder is at TDC on compression stroke			Θ			Θ	Θ	Θ

Figure 90: Valve Adjustment and Cylinder Configurations

Complete the following steps to adjust the engine value clearance.

1. Remove the rocker arm cover.
2. Remove the round cover (plug) from the timing mark access hole on the front of the bell housing.

WARNING: Loosen all of the injection lines at the injection nozzles to prevent the possibility of the engine firing while it is being rotated.

3. Place the engine at top dead center of the compression stroke for the number one cylinder.
   a. Rotate the engine in the normal direction of rotation (clockwise viewed from the water pump end). Rotate the engine until the 1-4 timing mark on the flywheel lines up with the index mark in access hole.
   b. Check the rocker arms on the number one cylinder.
   c. If the rocker arms are loose, the engine is at top dead center of the compression stroke for the number one cylinder.
   d. If the rocker arms are tight, the engine is at top dead center of the exhaust stroke for the number one cylinder. Rotate the engine 360 degrees to place the engine at top dead center of the compression stroke for the number one cylinder.
4. Check the valve clearance of both valves for the number one cylinder with a feeler gauge. Also check the valve clearance for the intake valve for the number two cylinder, and the exhaust valve for the number three cylinder. The clearance for both the intake and exhaust valves should be 0.15 to 0.25 mm (0.006 to 0.010 in.).

   NOTE: Check to make sure that the valve stem cap is in good condition and is positioned squarely on the top of the valve stem. Replace the valve stem cap if it shows significant wear.
5. Loosen the locknut and adjust the valves as required by turning the adjustment screw.

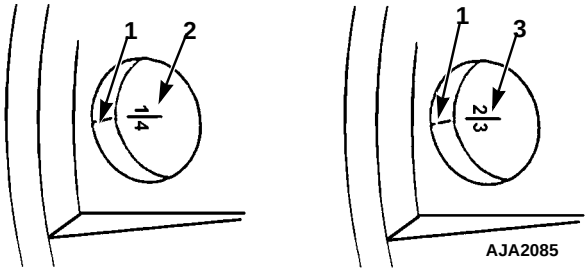

1.	Timing Mark
2.	Top Dead Center Mark for Cylinders 1 and 4
3.	Top Dead Center Mark for Cylinders 2 and 3

Figure 91: Timing Marks

6. Hold the adjustment screw while tightening the locknut.
7. Recheck the valve clearance.
8. Rotate the engine one full turn (360 degrees) to place the engine at top dead center of the compression stroke for the number four cylinder. Rotate the engine clockwise as viewed from the water pump end. Align the 1-4 timing mark on the flywheel with the index mark in the access hole. This places the engine at top dead center of the compression stroke for the number four cylinder.
9. Check and adjust both valves for the number four cylinder.
10. Place the engine at top dead center of the compression stroke for the number four cylinder. Also check the valve clearance for the intake valve for the number three cylinder, and the exhaust valve for the number two cylinder. The clearance for both the intake and exhaust valves should be 0.15 to 0.25 mm (0.006 to 0.010 in.).
11. Replace the rocker arm cover and the timing mark access hole cover. Tighten the fuel injection lines when finished.

Starters

The Tier 1 and Tier 2 engines use different starters. The Tier 2 engine has a more powerful starter to ensure reliable starting in extremely cold weather. Identify the starters by looking at the through bolts. The Tier 2 starter has external through bolts, but the Tier 1 starter does not. Do not try to put a Tier 1 starter on a Tier 2 engine. The Tier 1 starter does not fit on the Tier 2 engine because it is too long. The Tier 2 starter does fit on the Tier 1 engine. The Tier 2 starter requires heavier battery cables.

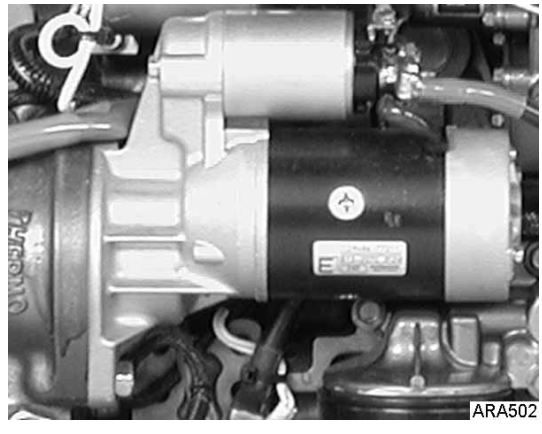

Figure 92: Tier 1 Starter

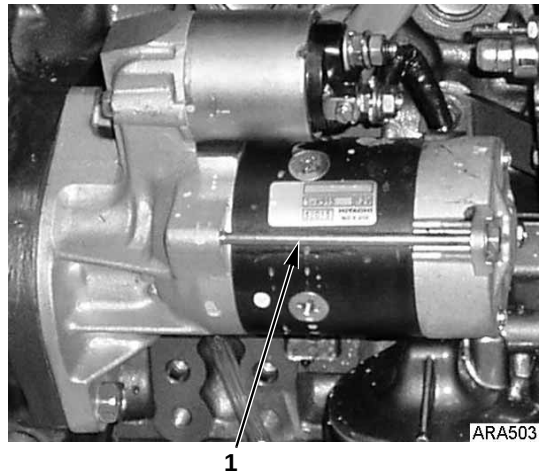

1.	External Through Bolt

Figure 93: Tier 2 Starter

Belt Tension Adjustment and Belt Replacement

NOTE: Belt tension specifications are measured using Thermo King belt gauge tool, P/N 204-427.

Belts should be regularly inspected during unit pretrip for wear, scuffing or cracking and correct tension.

Correct belt tension is critical for correct unit operation. Belts that are too loose will slip, squeal or whip causing excessive vibration levels and poor unit performance. Belts that are too tight will put too much strain on the belt fibers and bearings, causing premature belt and bearing failures. New belts should be tensioned cold.

NOTE: DO NOT attempt to remove or install belts without loosening adjustments. Belts that are installed by prying will fail prematurely due to internal cord damage.

WARNING: DO NOT jump belts on by cranking the engine. Personal injury may result.

WARNING: DO NOT attempt to adjust belts with the unit operating.

WARNING: With the unit On/Off switch in the "ON" position, the unit may start operation at any time without prior warning. Switch unit On/Off switch to "OFF" position before performing maintenance or repair procedures.

The water pump belt tension should read 15 to 35 on the belt tension gauge.

1. Remove the nuts from the water pump pulley.
2. Remove the pulley sliding section and add or remove shims to adjust the belt tension.

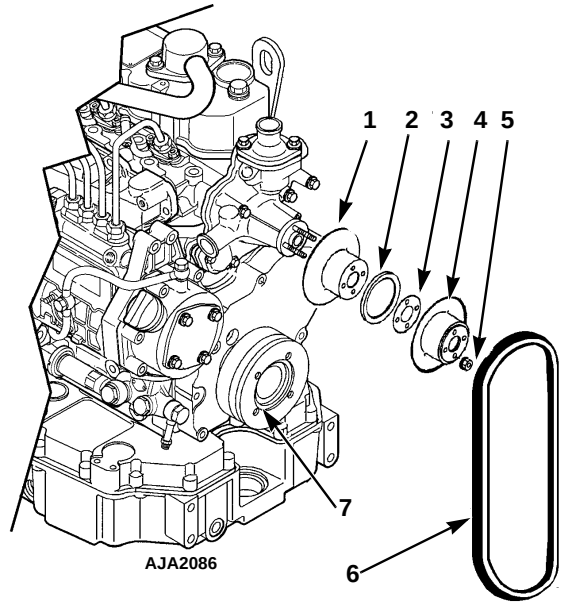

Water Pump Pulley (Items 1 - 5)	
1.	Fixed Pulley Section
2.	Spacer
3.	Shims (4)
4.	Sliding Pulley Section
5.	Nut (4)
6.	Belt
7.	Crankshaft Pulley

Figure 94: Water Pump Fan Belt

3. Reinstall the belt on the pulley and replace the sliding pulley section on the pulley.
4. Tighten the mounting nuts on the water pump pulley.
5. The belt tension should read 15-35 on the belt tension gauge.

NOTE: When adjusting the belt tension using shims and adjustable pulleys, the belt may still feel loose when the belt tension gauge indicates the correct tension. Allow 18 to 25 mm (0.75 to 1.0 inch) deflection with 3 to 4 kg (6 to 9 lb) of force.

Alternator Operation and Diagnosis

General Description

The 460/230 Vac alternator consists of three principal components: the main alternator, the integral direct-connected exciter, and an externally mounted excitation control system.

The main alternator may be subdivided into the 4-pole main rotating field and the main stator winding.

The main rotating field, the rotating rectifier and the exciter armature are all mounted on a common shaft. Output of the exciter is rectified by the shaft mounted rotating bridge rectifier. This provides excitation to the main alternator rotating field.

The externally mounted excitation control system is energized from the battery through a voltage regulator. The output from the main winding is stepped down by the power transformer. Then it is rectified by power bridge and added to the initial current supplied by the On/Off switch to build up alternator output.

The build-up continues until the voltage and amperage reaches the rated amount. The voltage regulator then decreases field current, and the alternator maintains the proper output voltage.

The exciter control system used with this generator differs from previous Thermo King control systems in that the relay board replaces the original safety devices and the silicon controlled rectifier (SCR). This will alter some test procedures that were utilized for previous control systems.

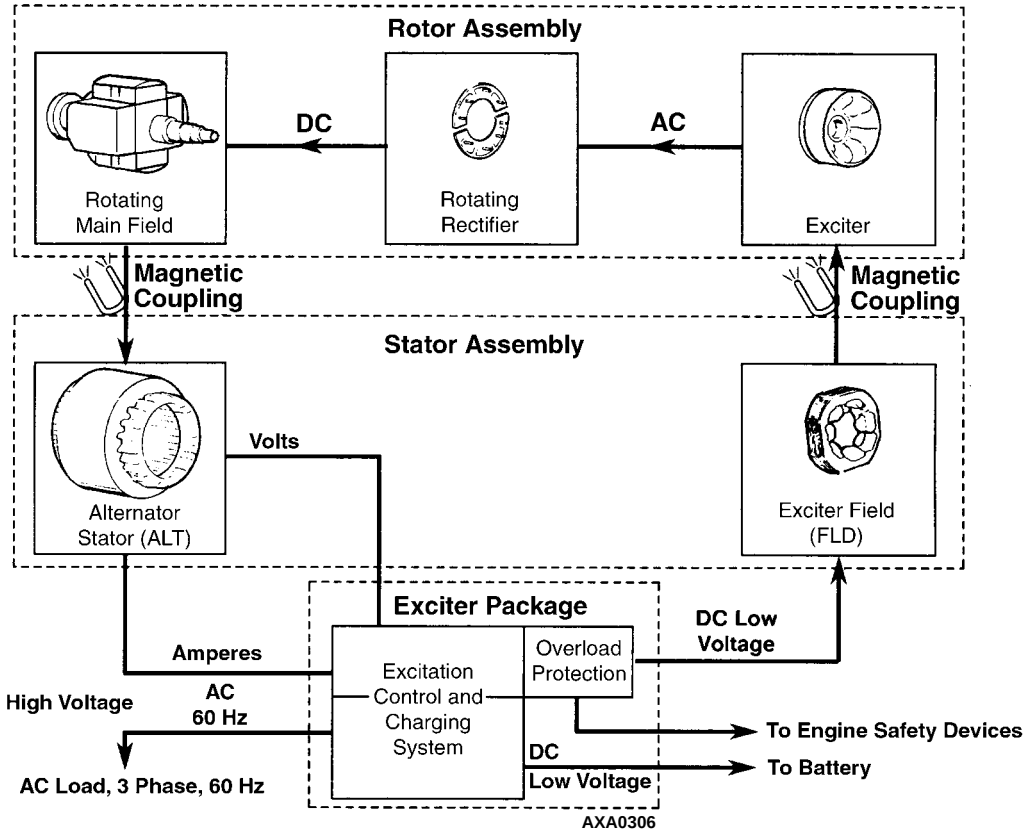

Figure 95: 460/230 Vac Alternator Component Function

Dual Voltage Alternator

The generator set is factory wired for 460V power output. The alternator output can be changed to 230V by changing the jumper wire connections at the terminal strips in the control box. See “Rewiring Procedures for Changing the generator Set Output Voltage” in the Electrical Maintenance Chapter.

Function Of Components In Exciter Control System

BR1

Bridge Rectifier 1 rectifies current from the power transformer to charge the battery and supply the exciter circuit.

BR2

Current Bridge Rectifier (BR2) rectifies the ac output of the current transformer. This current is then used for dc excitation current through the orange wire, through diode D3 and into the exciter field. During an overload, this output increases greatly and is used to boost alternator output.

CB1

Circuit Breaker 1 is electrically located between the current limiter and On/Off switch. The circuit breaker trips open if the dc control circuits overload.

TRF-1

Power Transformer, 3-phase transformer wired in parallel with the output of the alternator. As the voltage from the alternator rises, so does the output side of the power transformer. After rectification, this voltage is sensed by the voltage regulator which then controls alternator output.

TRF-2

Current Transformer senses an abrupt increase in current demand on the alternator. This in turn sends an increased current flow through the current bridge rectifier bypassing the voltage regulator and going directly to the alternator field winding.

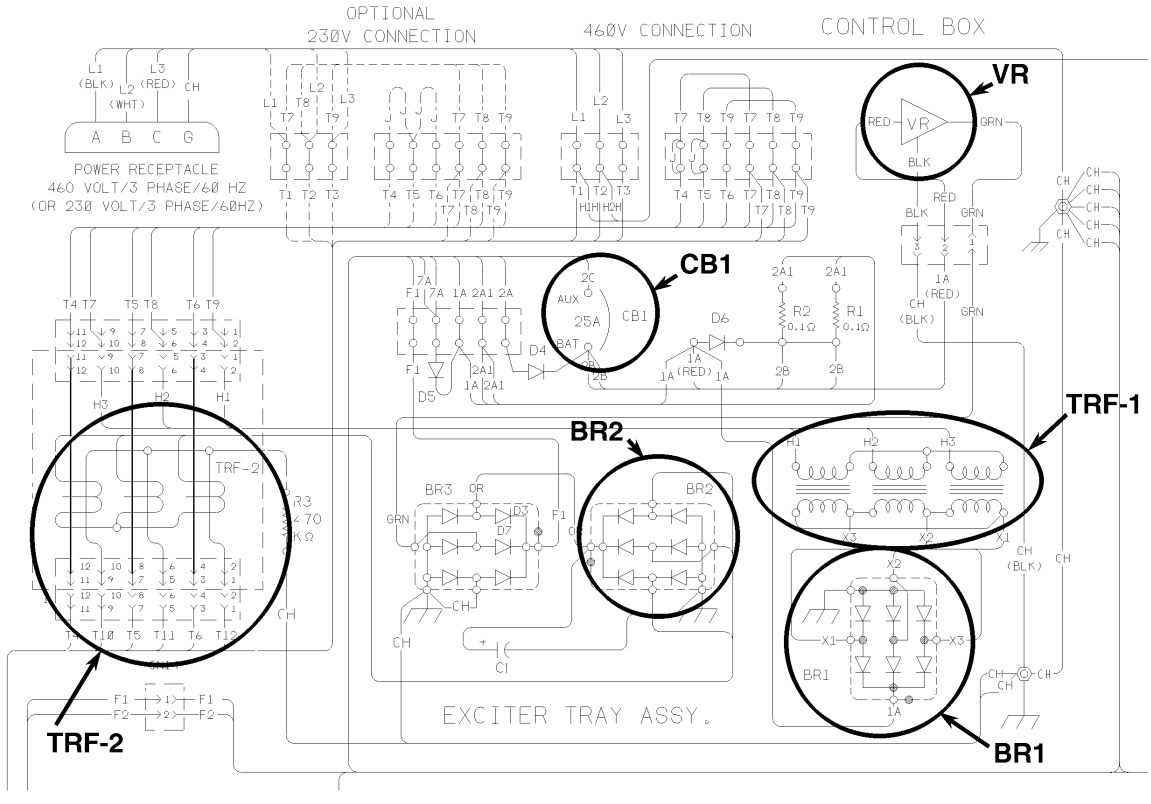

AXA0307

Figure 96: 460/230 Vac Alternator Component Function

VR

The Voltage Regulator measures the power bridge output voltage (RED wire) and supplies exciter field current (GRN wire) to the field circuit as required to maintain voltage (and main generator output) at the desired level.

The voltage regulator also maintains a potential at the output of the power bridge suitable for the charge requirements of the unit battery and engine electrical controls.

D1

Diode 1 protects the Preheat/Start switch from negative transient voltages caused by arcing at the starter solenoid.

D2

Diode 2 is not used on generator set models with TK486 engines.

D3

Diode 3 (part of bridge rectifier BR3) isolates the current bridge rectifier BR2 from the voltage regulator output and from the transients generated in the field coils. Allows current bridge rectifier to control field voltage during motor starts and overload conditions.

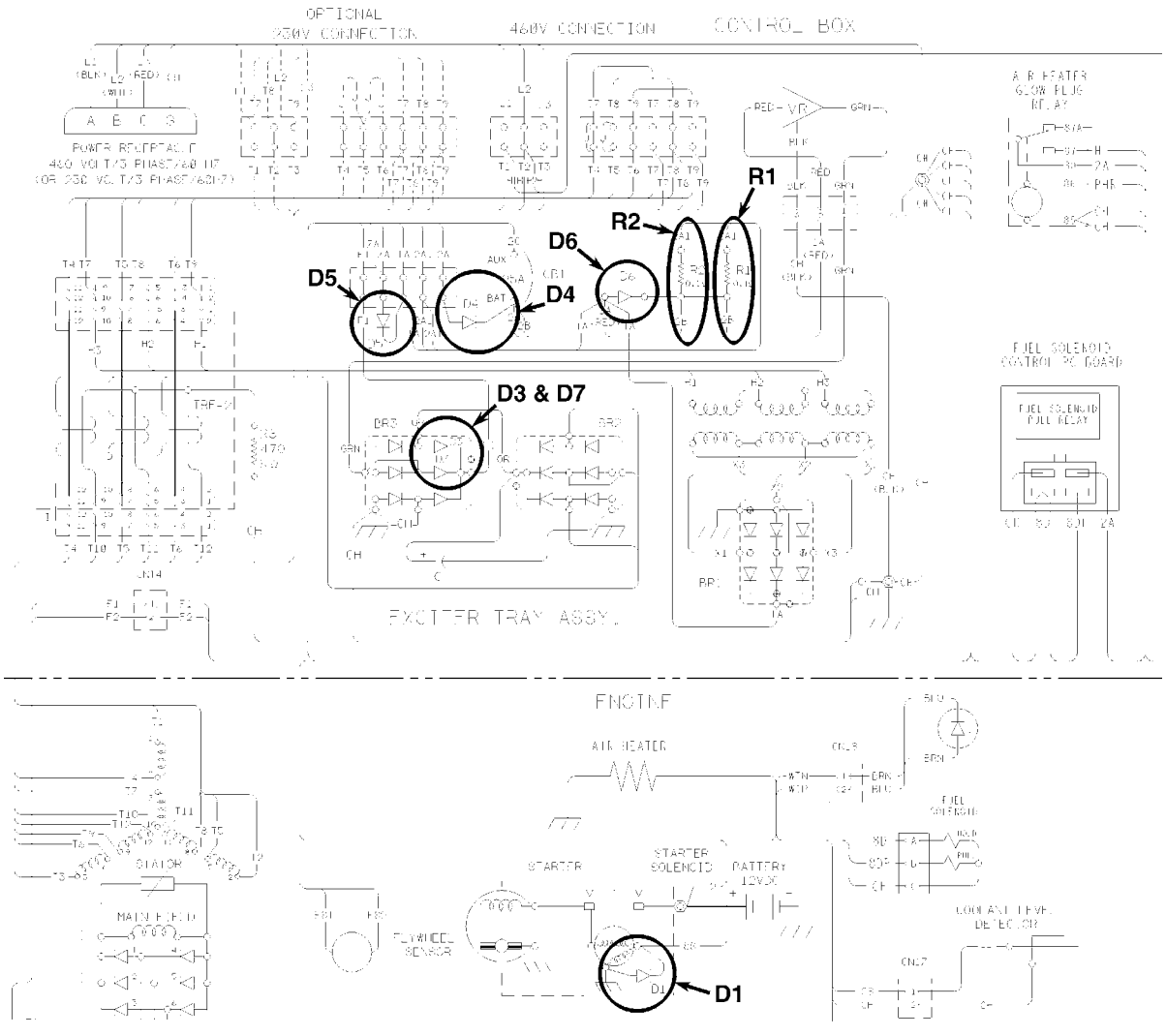

AXA0308

Figure 97: 460/230 Vac Alternator Component Function — Diodes (D2 is Not Used)

D4

Diode 4 prevents the battery charging current from bypassing the positive temperature coefficient (PTC) charge limiting resistors R1 and R2.

D5

Diode 5 prevents feedback from power bridge rectifier BR1 to engine controls, fuel solenoid, etc. (necessary in order to shut machine down). Permits flow of initial excitation current needed for building up normal alternator output voltage.

D6

Diode 6 isolates alternator excitation system from the battery when the unit is shut down (necessary to avoid drain on battery when unit is Off). Permits battery charging current to pass from power bridge rectifier BR1 to ammeter and then back to the battery.

D7

Diode 7 isolates and protects regulator from high voltages which are normally developed across field during motor starts or under heavy overload. Also allows regulator to control field voltage during normal operation.

R1 & R2

The Positive Temperature Coefficient (PTC) resistors are charge rate control devices that prevent the charge demand of a discharged unit battery from influencing the voltage output of the main generator.

Alternator Function

Starting Excitation

The initial excitation for the alternator is supplied by turning the On/Off switch to the “ON” position. Current flows from the unit battery through the No. 2 wire, the ammeter, the fusible link, diode D4, CB1, the On/Off switch, and the 8-wire to the relay board. The relay board sends current through the No. 7A wire and diode D5 to the RED lead of the voltage regulator. The regulator sends the current out on the GRN wire through diode D7 (part of bridge rectifier BR3) to wire F1. Wire F1 sends the current through the exciter field to build voltage in the stator windings. The current then travels through wire F2 to the relay board where the circuit is completed to chassis ground by the Field Relay.

NOTE: The Field Relay does not become energized by the relay board for approximately 15 seconds after the engine starts.

Running Excitation and Control

Once the alternator is excited by the unit battery, then excitation is provided by the alternator itself.

The magnetic field that was formed in the exciter field stator winding by battery current induces a current in the exciter rotating winding. This current is changed from three-phase ac to dc by the rotating rectifier. The dc current is transferred to the main alternator field winding. The main alternator field now becomes magnetic.

The magnetic field formed in the main field winding now induces a voltage in the alternator stator windings. This voltage is either 230 Vac or 460 Vac, 3-phase, depending on stator connections.

It is sent out of the alternator stator leads to the power plug and then to the load. The power transformer (TRF-1) is tapped into the alternator stator leads. The transformer reads the alternator output voltage and steps this voltage down to around 12 Vac (1/20th of output voltage). This current is fed through the power bridge rectifier (BR1), rectified to dc current and is sent into the 1A circuit, and some of it goes to the voltage regulator.

The voltage regulator RED lead is connected to the 1A circuit, and it utilizes power bridge output to measure alternator voltage. It also uses the power bridge current output as a source of exciter current rather than using the unit battery.

A portion of running excitation is actually supplied by the current transformer (TRF-2) and current rectifier (BR2). The current transformer is designed to produce output current in direct relation to the amount of current flowing from the alternator to the load. The output current is rectified by the current bridge (BR2) and then used as additional field current.

The design of the current transformer limits the amount of transformer current output to less than the field requirement to maintain normal alternator voltage. Therefore, the alternator output voltage would tend to be low. The voltage regulator then senses a low alternator output voltage. It takes current from the power transformer (TRF-1) and rectifier (BR1) and adds to the field current to bring the alternator output voltage up to normal.

If the alternator output voltages rise above the predetermined limit, the power transformer will reflect this rise in its output voltage. The voltage regulator sensing the higher voltage will then reduce the exciter current to the field winding. This reduces exciter current to the main alternator field, reducing the alternator output.

In essence, a 12 Vdc automotive-type voltage regulator is controlling a 15 KW ac alternator by taking a sample of the alternator output, reducing the voltage and sending it to the field.

Temporary Overload

For temporary overloads (such as refrigeration unit start up), the excitation control system utilizes the current (boost) transformer (TRF-2) and rectifier (BR2) to handle the overload.

When the alternator output current is normal, the current transformer is supplying a portion of the current used to excite the alternator field. When an overload occurs, the increased current flow from the alternator through the current transformer causes an immediate increase in current transformer output. This increased output overrides the voltage regulator output and boosts the output of the alternator to handle the temporary overload.

Battery Charging

The unit battery is recharged using current from the power bridge rectifier (BR1). Current flows from the rectifier bridge through the 1A wire and through diode D6.

The current is then divided between two wires, 2A1 and 2A2 and then through two resistors R1 and R2 which have the characteristic of their resistance increasing in proportion to temperature. This limits the amount of current that a battery, in a discharge state, can receive from the system. If a battery will accept large amounts of current, the resistors heat up and their resistance increases. This will limit the amount of battery charging current.

Overload Shutdown

The overload shutdown is provided by the relay board.

If an overload condition becomes more than temporary, the reduction in alternator output voltage due to the overload causes the Voltage Regulator (VR) to increase field current through wire F2 to the relay board. The module senses the overload current and then de-energizes the fuel solenoid to stop the engine.

If the relay board shuts down unit operation, it indicates one of the following:

1. There is a malfunction in the load causing the load to fail to start or to draw single phase current.
2. The engine speed or power is low due to improper speed adjustment, fuel supply problems or other mechanical conditions while the generator is supplying motor starting current to the load.
3. Internal component failure in the excitation control system, resulting in excessive field current. This includes possible malfunction of protective elements in the excitation control.
4. Failure in the alternator rotating elements (exciter armature, rotating diode assemblies or main field) can cause the regulator to supply excessive exciter field current.
5. Engine shutdown on low engine oil level, low oil pressure or high water temperature.

Alternator Diagnosis

Preliminary Checks

Before attempting the more complicated diagnosis procedures, check the following items to ensure a superficial problem is not overlooked.

NOTE: Further diagnosis is a waste of time until these items are checked, since a problem in one of these areas will influence test results.

1. If the generator malfunction is accompanied by excessive black exhaust smoke and engine lugging, double check all possible engine problems such as fuel supply, injection timing, engine speed, restricted air cleaner, etc.
2. Disconnect the refrigeration unit from the generator and check the output voltage at the plug. Voltage between the three phases should be between 230 to 250 Vac or 460 to 500 Vac depending on engine speed and whether the alternator stator is wired for 230 or 460 Volt operation. All three phases should be within 3% of each other. If the voltages appear normal, make sure the refrigeration unit is not at fault. Reconnect refrigeration unit and run in Cool mode. Check the amperage draw with an induction type ammeter (amprobe), and compare it with the load plate on the refrigeration unit.
3. Check the condition of the generator set battery. A discharged unit battery can increase the voltage regulator output, causing the generator output voltage to be high. The unit battery should have a minimum voltage of 12 Volts. Perform a load test on the battery to check it’s condition.

4. Check all push-in plugs on control circuit for loose pins or sockets. Make sure all wire terminals are tight.

Test Instruments

If the preceding checks did not uncover the cause of the malfunction, more extensive diagnosis procedures will be required. The following tests will require various electrical test instruments, and the technician performing the tests should have a good working knowledge of their basic electrical principles.

The tests are intended to determine whether the source of difficulty lies in the generator itself or in the excitation control system. Following the procedures carefully will, in many cases, avoid unnecessary dismantling and reassembly of the generator when easily corrected problems may exist in the external circuitry.

The test instruments required:

1. AC-DC voltmeter 2.5 Volts to 500 V ranges (± 2% max. error).
2. AC induction ammeter (amprobe).
3. DC ammeter (preferably induction type TK No. 204-449).
4. Ohmmeter.
5. Megohmmeter (Megger®)
6. Motorola alternator plug adapter with an automotive light bulb assembly (or with a resistor and LED). The light bulb assembly can be built very quickly. It requires a No. 1073 light bulb (12.8 Volts, 23 watt, 1.9 amp bulb) and a matching socket, two alligator type clips and the plug from a discarded voltage regulator.

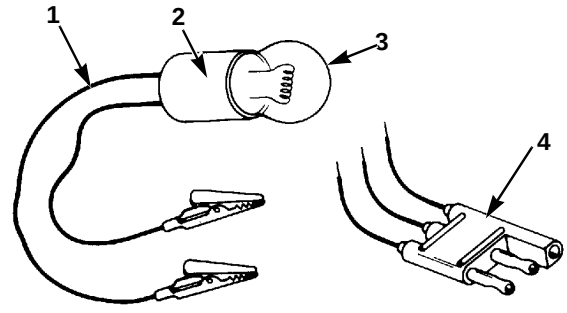

1.	Alligator Type Clips
2.	SC Bayonet Base Light Socket
3.	1073 Single Filament Automotive Light Bulb (or similar 12.8 Volts, 23 watt, 1.8 amp Light Bulb)
4.	Motorola Alternator Plug Adapter

Figure 98: Alternator Test Equipment

Alternator Malfunctions

Listed below are the categories in which most generator malfunctions will fall. Following each category are a number of possible component failures that may cause the malfunction. Listed with each component is the test used to check the component.

NOTE: Always use Test 1 first to determine if the alternator or the exciter control package is at fault.

1. Generator set will not pick up the load (low or no output voltage).
   a. Diode D5 is open circuit (Test 2, 6).
   b. Voltage regulator (VR) is defective (Test 2).
   c. Diode D7 (part of bridge rectifier BR3) is open circuit (Test 2, 6).
   d. Exciter field circuit in alternator is open circuit (Test 2, 7).
   e. Relay Board is defective (Test 2).
   f. Alternator stator, main rotating field, rotating rectifier or rotating exciter armature is defective (Test 8).

2. Generator set tries to pick up the load but engine labors excessively, eventually causing an overload condition and causing the Relay Board to shutdown unit operation.
   a. Mechanical problems with engine (see preliminary check 1).
   b. Excessive load from refrigeration unit malfunction (see preliminary check 2).
   c. Current transformer (TRF2) or current bridge (BR2) defective (Test 4, 6).
   d. Diode D7 open circuit (Test 2, 6).
   e. Relay Board defective (Test 2).
   f. Defect in rotating field, rotating bridge, alternator main field or alternator stator (Test 8).
3. Generator set causes the Relay Board to shut-down unit without apparent overload.
   a. Power bridge (BR1) inoperative (Test 2, 3, 6).
   b. Voltage regulator (VR) failed in ON position (Test 2).
   c. Exciter field circuit shorted or low resistance (Test 2, 7).
   d. Defective rotating exciter armature, rotating rectifier, exciter field circuit or main alternator stator (Test 8).
   e. Engine speed too low. Reset injection pump/governor speed to 1800 ± 10 RPM at Full Load (60 Hz alternator output); 1950 ± 10 RPM No Load.
4. Generator set output voltage too high.
   a. Unit battery discharged (see preliminary check 3).
   b. Voltage regulator (VR) defective (Test 2).
   c. Power bridge (BR1) not functioning (Test 2, 3, 6).
   d. Shorted exciter armature (Test 8).
5. Unit battery undercharged.
   a. No output from power bridge (BR1) (Test 2, 3, 6).
   b. Diode D6 open circuit (Test 2, 3, 5, 6).
   c. PTC resistors (R1, R2) open circuit (Test 5).

Test No. 1

This test will determine whether the alternator or the excitation control system is causing the malfunction. The test requires the use of the 1073 bulb assembly.

CAUTION: Make sure the generator set is disconnected from any load and the orange wire is jumpered to ground. Severe damage to the current transformer will occur if the load should attempt to start during this test.

1. Connect a jumper from red wire on BR2 to ground (CH) on circuit board during test.
2. Disconnect F1 and F2 leads from the alternator. Using a jumper wire, connect F2 to a known good ground.
3. Connect one lead of the light assembly to a known good 12 Vdc source such as the No. 2 wire at the ammeter. The other lead will be used later.
4. Start the engine and make sure speed is 1800 ± 10 rpm at Full Load (60 Hz alternator output); 1950 ± 10 rpm No Load.

CAUTION: Remember that hazardous electrical potentials will be present on alternator output terminals on exciter control. The ground (negative) connection bypasses all exciter control overload protection.

CAUTION: Care must be exercised to avoid damage to the alternator in the event there is an internal or external short circuit.

5. Attach the free lead of the bulb assembly to F1. A slight change in the sound of the engine should be evident as alternator voltage and excitation builds up.

CAUTION: If the engine bogs down or produces black smoke, there is a short circuit in the alternator or its output circuits. In this event, disconnect the light assembly and shut down the engine. Refer to Tests 7 and 8.

6. Measure alternator output voltages on L1-L2, L1-L3 and L2-L3. Voltage will normally be between 460 and 500 volts or 230 to 250 volts depending on engine speed and whether the alternator stator is wired for 460 or 230 volt operation.
7. Low or no output voltage indicates a problem in the exciter field coils or the alternator itself. To check alternator or field coils, see Tests 7 and 8.
8. Normal output voltage indicates alternator is almost certainly in good condition. (Some machines may exhibit near normal output voltage with one defective rotating diode. A defective rotating diode would impair the generator set motor-starting capabilities.) Battery voltage should indicate CHARGE. If not, power transformer, power bridge BR1 or diode D6 is defective (Tests 4, 6 and 7).

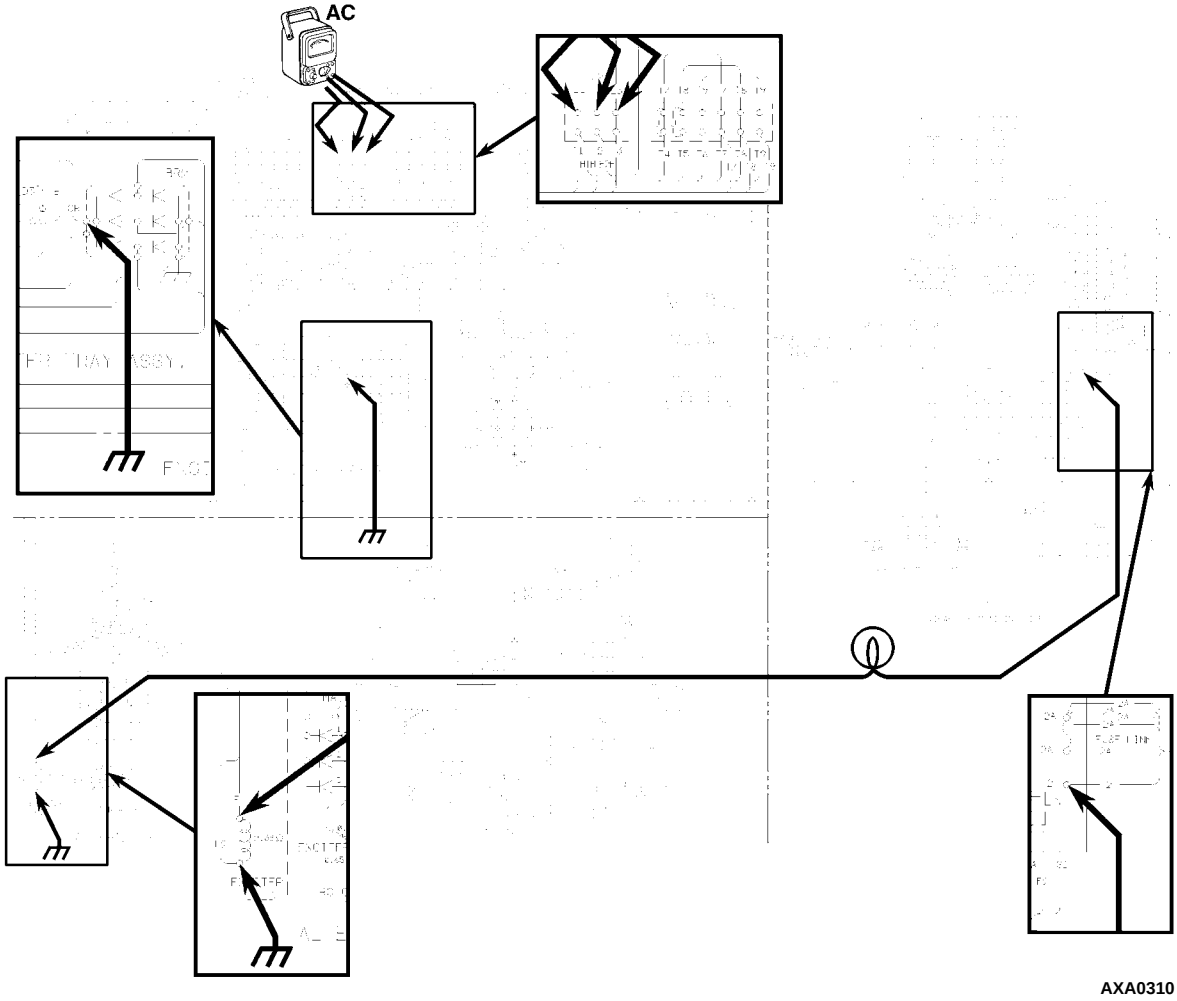

Figure 99: Alternator Test No. 1

Test No. 2

Test 2 checks the voltage regulator and also checks the initial exciter circuit from the unit battery to the field circuit.

A. Voltage Regulator Quick Test

The voltage regulator can be checked quickly by unplugging it from the system and substituting the 1073 bulb assembly and Motorola adapter plug.

1. Unplug the voltage regulator connector.
2. Start the generator set engine.
3. Wait at least 15 seconds. Then connect the light assembly from the red wire to the green wire at the adapter plug.

- If the alternator picks up the load and operates normally (alternator output voltage may be slightly high), then the voltage regulator is faulty. Replace the voltage regulator.
- If the alternator does not pick up the load, stop the unit. Remove the light assembly and connect the voltage regulator to the wiring harness. Go to “Initial Exciter Circuit Test”.

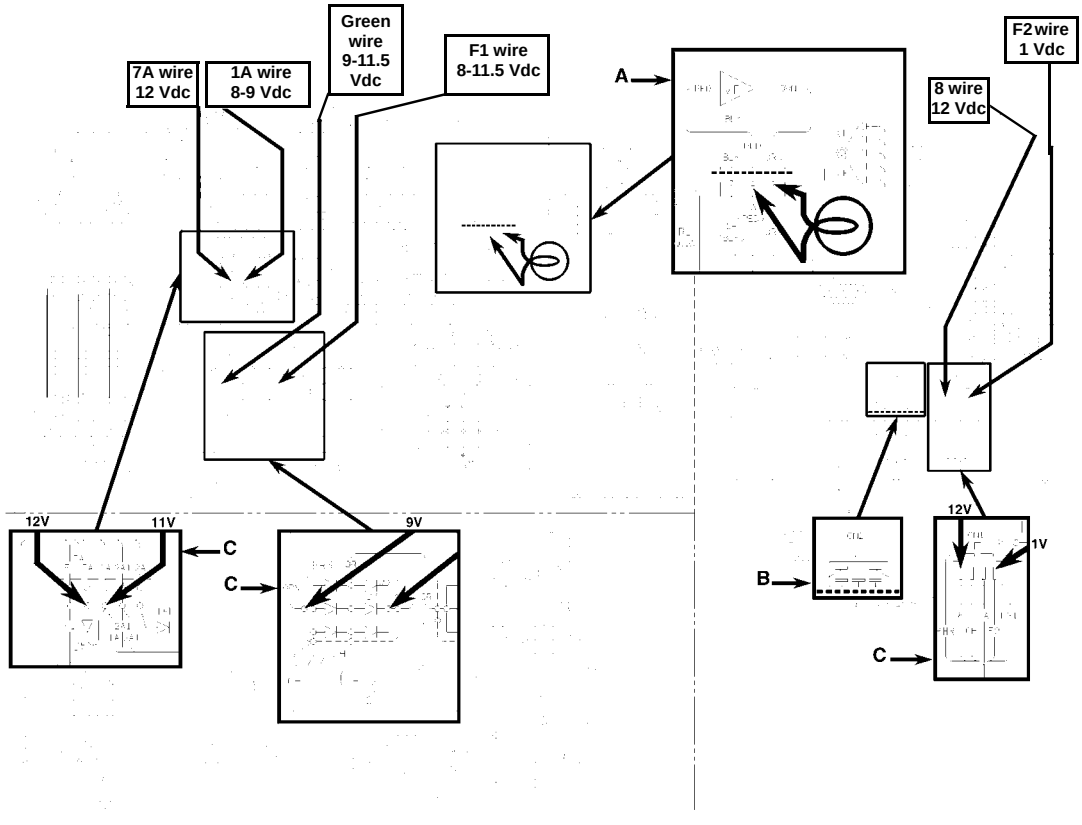

A.	Voltage Regulator Quick Test	C.	Check Voltage Here
B.	Disconnect CN2 for Voltmeter Readings		

Figure 100: Alternator Test No. 2

B. Initial Exciter Circuit Test

1. Water temperature must be above 90 F (32 C) so field relay is energized. The field LED on the relay board must be illuminated.
2. Unplug the connector labeled CN2 from the relay board to prevent tripping of the safety circuitry while the generator set switch is ON.
3. Remove the starter relay so the unit does not start during the test.
4. Turn the unit switch On, but DO NOT start the engine.
5. Wait at least 15 seconds then using a dc voltmeter, check for voltage at the following locations:

NOTE: Nominal Voltage readings may vary ± 10 percent depending on battery voltage.

No. 8 wire at relay board: 12 Vdc: No voltage here indicates a failed ammeter, fuse link, diode D4, circuit breaker CB1 or On/Off switch.

No. 7A wire at terminal board: 12Vdc: No voltage here indicates a failed Power Relay (PR) or relay board.

No. 1A wire on terminal board: 11 Vdc: No voltage here indicates a failed diode D5.

GRN wire at bridge rectifier BR3: 9 Vdc: No voltage here indicates failed voltage regulator. Higher voltage indicates the voltage regulator may have failed in full-on position or field circuit is open (Test 7).

Wire F1 at bridge rectifier BR3: 8 Vdc: No voltage here indicates open diode D7 (part of bridge rectifier BR3 Test 6).

Wire F2 at connector CN1 of relay board: 1 Vdc:

No voltage here may indicate an open field coil winding within the alternator. Higher voltage indicates a de-energized or failed Field Relay or a failed relay board.

6. Turn the unit switch Off.
7. Reconnect connector CN2 to the relay board.
8. Reinstall the starter relay that was removed in Step 3.
9. Turn On/Off switch On and start the generator set.
10. Start the generator, wait until the AC delay has expired or the field LED on the relay board illuminates. Voltages should be as follows:
    a. No. 8 wire at relay board: 13.5 Vdc
    a. No. 1A wire on terminal board: 14 Vdc
    a. GRN wire at bridge rectifier BR3: 3-5 Vdc
    a. Wire F1 at terminal board: 2.5-4 Vdc

NOTE: The above voltages indicate that the alternator output voltage is stepped down by transformer TRF1 and rectified by the power bridge rectifier (BR1) thus increasing the voltage on wire 1A and causing the voltage regulator (VR) output to correctly respond by decreasing its output at the GRN wire.

11. Turn the refrigeration unit on to apply load to alternator. Higher or lower than normal voltages at F1 indicate voltage regulator failure. Replace the voltage regulator. If alternator output still is too high or low, or if voltage at F1 is not correct, check field circuit (see Test 7). Voltages should be as follows:
    a. No. 8 wire at circuit board: 13 Vdc
    b. No. 1A wire on terminal board: 14 Vdc
    c. GRN wire at bridge rectifier BR3: 8 Vdc
    d. Wire F1 at terminal board: 7.25 Vdc

NOTE: A voltage regulator failure in the full ON condition will cause high alternator voltage and will cause the relay board to shut the unit down from field circuit overload.

12. The field circuit amperage can be checked with a dc ammeter. The field amperage should be between 1.5 to 2.5 amps. under normal load conditions. If the amperage is too high or too low, recheck the engine speed. If the speed is correct, replace the regulator. If the amperage is still not correct, check the field circuit (see Test 7).

CAUTION: The voltage regulator used on the generator TK Part No. 44-3345 is not the same as the voltage regulator used on Thermo King over-the-road diesel transport refrigeration units. The voltage setting is lower on the refrigeration units.

Test No. 3

Test 3 checks the power bridge (BR1) and power transformer (TRF1). If the power bridge fails completely, the voltage regulator will not receive the normal voltage rise out of BR1. The low voltage (battery voltage), in the 1A circuit keys the regulator to go to full field current and therefore high alternator output voltage, eventually tripping the relay board from excessive field current and thus shutting the generator set down. A defective power bridge also causes the unit ammeter to show a discharge condition, although the no charge condition can be caused by other malfunctions.

To test the power bridge (BR1):

1. Attach a dc voltmeter to terminal 1A of the terminal board.
2. To prevent the unit from starting during the test, remove the starter relay. Remember to reinstall the starter relay after the test has been completed.
3. Turn the generator On/Off switch to the “On” position, but do not start the engine. The voltmeter should show a reading of 10 to 11 volts (1.5 volts less than battery voltage).

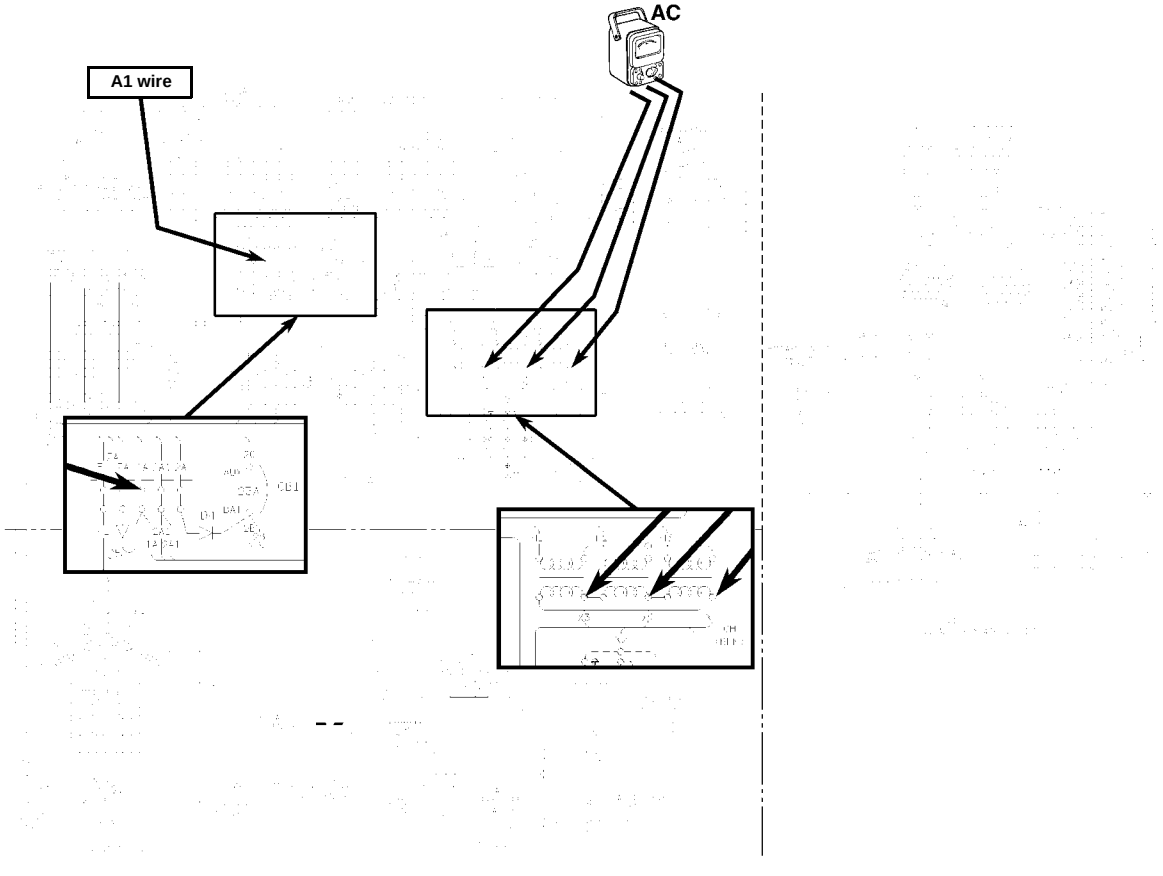

Figure 101: Alternator Test No. 3

4. Attempt to start the unit. The voltage should rise to approximately 14.5 volts (depending on battery's state of charge). This indicates the power bridge (BR1) and power transformer (TRF1) are functioning.

If the voltage does not rise, using an ac voltmeter, check the voltage across (X1-X2), (X2-X3), (X3-X1). The correct voltage is approximately 12 to 13 Vac. This ac reading will be less than the dc output of the power bridge rectifier. This is normal and is due to the fact that the ac voltmeter does not read the peak voltage of an ac sine wave but reads an average figure (RMS factor). This phenomenon will usually only occur in a three-phase ac, bridge rectifier combination. If the ac voltage is correct but the dc output was low or non-existent, replace the power bridge rectifier (BR1). If the ac voltage from the power transformer is low or non-existent, replace the power transformer (TRF1). It is virtually impossible to check the ac input to the power transformers so if the alternator output is near normal or high, assume that the power transformer input is normal.

Test No. 4

This test checks the output of the booster circuit. The booster circuit is utilized when the generator starts up a load.

1. Disconnect the voltage regulator and install the Motorola adapter plug in its place. Attach one lead of the bulb assembly to a known good 12 Vdc source (No. 2 wire on the ammeter). The other lead will eventually be connected to the green wire on the Motorola adapter plug.

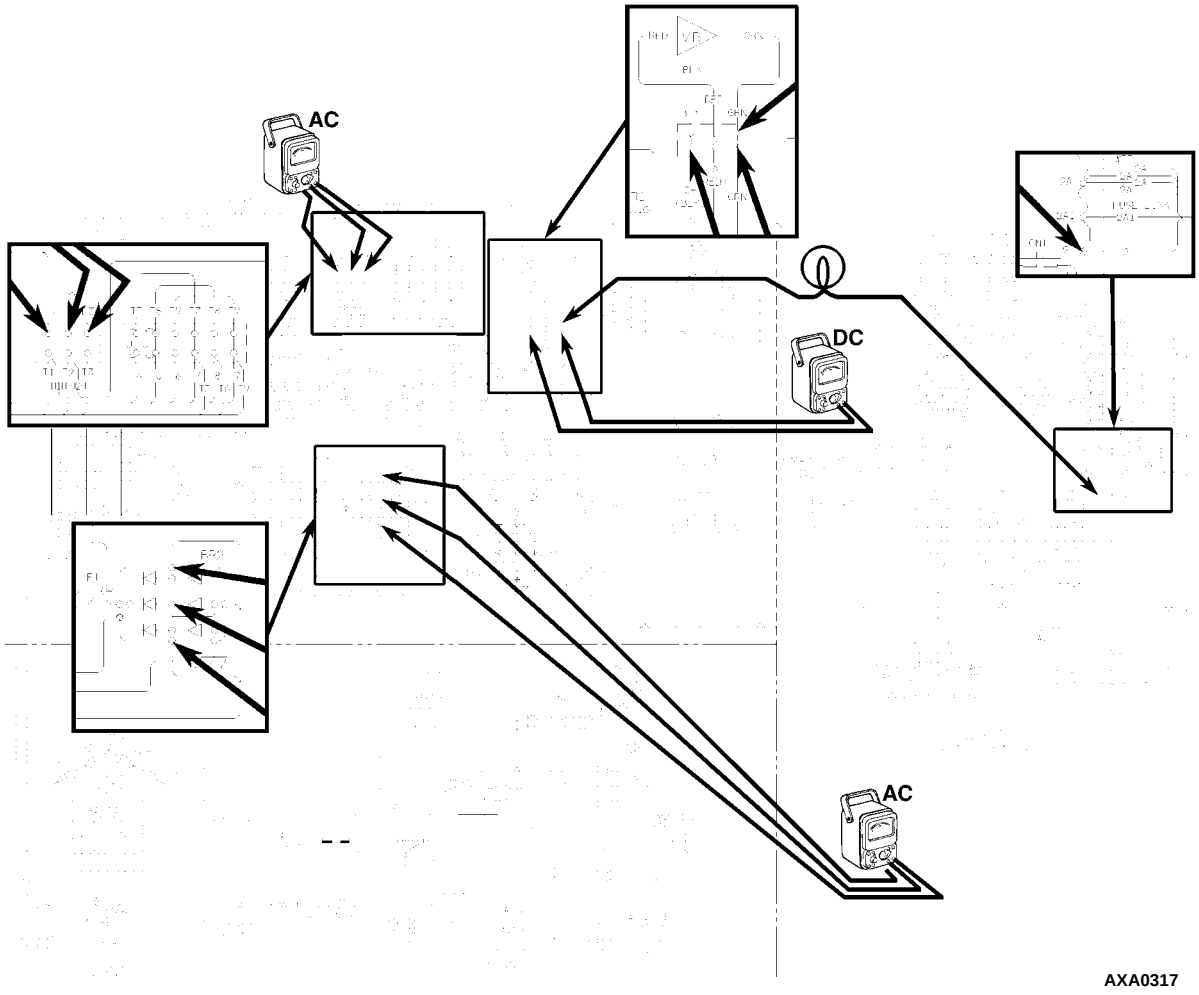

Figure 102: Alternator Test No. 4

2. Hook up a dc voltmeter across the green and black wires on the adapter plug to measure exciter field voltage as shown. Voltmeter must have a range of at least 50 volts.
3. Hook up a load (refrigeration unit) to the generator and turn the refrigeration unit On/Off switch to the “On” position. Make sure the refrigeration unit thermostat is set below box temperature so the unit will start immediately.

CAUTION: The generator set is not designed to start a refrigeration unit from a dead stop, but for this test an exception is made.

4. Attach the bulb assembly lead to the green wire on the adapter and turn the generator set On/Off switch to the “On” position. The voltmeter should show 5 Vdc.
5. Start the generator set engine. The refrigeration unit should start, and voltage should increase from 5 volts cranking to 10 to 12 or possibly higher, and then drop back to approximately 7 Vdc as the alternator picks up and starts the load. If field voltage does not rise as the generator set attempts to start the load or if the load will not start, the booster system is not functioning properly.
6. Turn the refrigeration unit On/Off switch to the “Off” position once the refrigeration unit is running. Turn the refrigeration unit back On, and observe the voltmeter and alternator output voltage. Field voltage should rise momentarily as the refrigeration unit starts, and the alternator output voltage should not drop below approximately 360 or 190 volts, depending on how the alternator is wired. If the required booster voltage is not present, check the current bridge rectifier (BR2) (Test No. 6).
7. If the current bridge rectifier (BR2) is ok, repeat the test checking for ac voltage on (X1-X2), (X2-X3), (X3-X1) at the booster bridge (BR2). If the normal voltage rise (10 to 12 Vac) is not present from the current transformer (TRF2), replace the current transformer.

Test No. 5

NOTE: Before testing the battery charging circuit, run the generator set to bring all the components up to normal operating temperature.

Test 5 checks the battery charging circuit. If the unit ammeter indicates no charge or if the battery is under charged, test the power bridge (BR1) (Test 3) to make sure the bridge is providing adequate voltage to charge the battery (14.6 ± 0.2 Volts). If the voltage from the power bridge is correct, using a dc voltmeter, check the voltages at the following locations with the unit running.

1. Wire 1A at the terminal board 14.6 ± 0.2 Volts.
2. At diode D6 and the R1 and R2 charging resistors: Voltage reading should be 0.8 to 1.0 Volts less than the previous reading, indicating the diode D6 is conductive. A larger difference indicates the diode is open circuit.
3. Wire 2A1 at the terminal board: There will be a small voltage drop across the R1 and R2 resistors (.5 volt). If the battery never receives charging current, then the resistors are probably open circuit. The only reliable method of testing the resistors is to unsolder both of them from their connections and measure their resistance with an ohmmeter (0.1 ohm at room temperature).

NOTE: Ambient temperature and battery charge rate will have an affect on the voltage drop across the R1 and R2 resistors.

If the battery discharges while the generator set is not used, check diode D6 (Test 6). It is probably short circuit. Overcharging of the battery is usually caused by a faulty voltage regulator. The voltage regulator controls the ac alternator and the battery charging voltage so an over-charged battery is usually accompanied by higher than normal output voltage. If this is the case, replace the regulator.

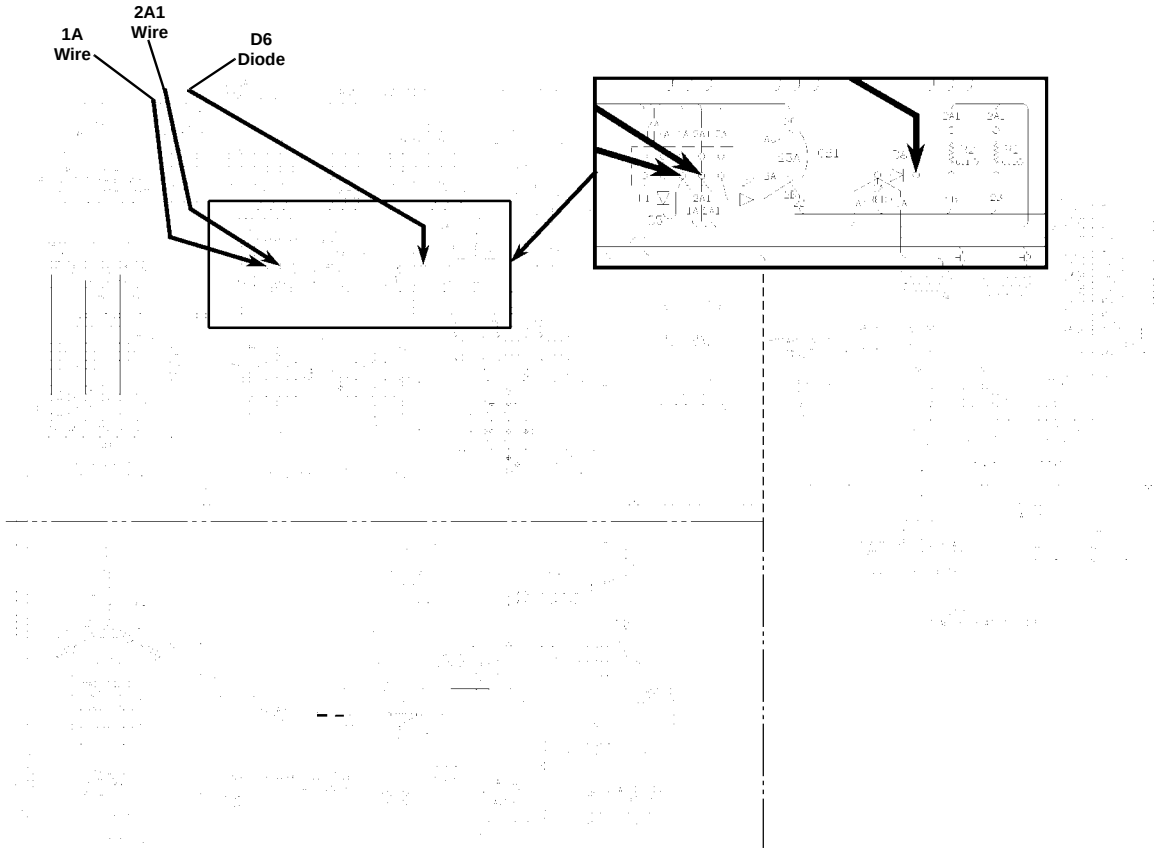

Figure 103: Alternator Test No. 5

Test No. 6

Test No. 6 tests individual diodes and bridge rectifiers. To test diodes and bridge rectifiers, one thing must always be kept in mind. The diode or bridge must be isolated from the circuits that are attached to it. If this is not done, a feedback problem can exist, and the ohmmeter may indicate a defective diode when in actuality it is not.

CAUTION: When unsoldering a diode or bridge rectifier, use a HOT soldering iron and also hold a needle-nose pliers between the rectifier and soldering point to prevent destructive heating. Bring the connection up to soldering temperature quickly, and remove heat as soon as the solder flows.

When testing diodes:

- Use X100 scale on the ohmmeter
- Reject diodes that have excessive leakage (read less than 100,000 ohms) reverse polarity
- Reject diodes that read low in both directions or “Open” in forward direction.
- Good diodes will have a high resistance reading in one direction and a low reading when ohmmeter leads are reversed

When testing bridge rectifiers:

1. Unsolder wires from rectifier.
2. Place one ohmmeter lead on RED dot terminal, the other lead on each ac terminal in turn. The three ohmmeter readings should be similar to each other.

3. Reverse lead polarity, and repeat the test. Results should be all similar to test “A” in one polarity direction, test “B” in the other (ohmmeter leads reversed).
4. Place one ohmmeter lead on the case, the other lead on each ac terminal in turn. Reverse lead polarity and repeat. Results should be all similar to test “A” in one instance, test “B” in the other.

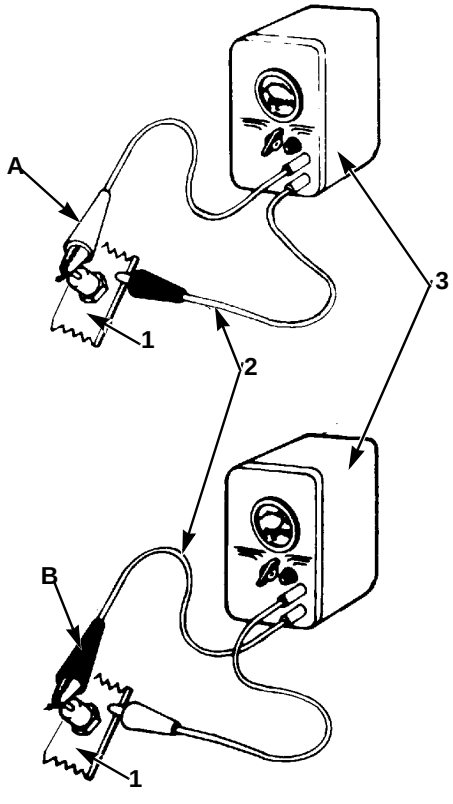

A.	Check Reverse Leakage Resistance: On a good diode, ohmmeter reads high resistance with little or no movement of indicator needle.
B.	Check Forward Conductance: On a good diode, ohmmeter reads 1/2 to 2/3 of resistance scale.
1.	Bridge Rectifier
2.	Leads
3.	Ohmmeter

Figure 104: Alternator Test No. 6: Diodes

Test No. 7

Test 7 determines the condition of the exciter field circuit.

1. Disconnect the field wires F1 and F2 from the control box circuitry. Measure the resistance of the field circuit (F1 to F2). The standard value is 2.37 (± 10%) ohms at 77 F (25 C).
2. Measure F1 or F2 to GND for possible shorted to ground coils.
3. Reconnect the field wires.

Test No. 8

Test 8 includes testing the main alternator-stator, the rotating field, the rotating rectifier, and the rotating field armature. All tests must be made with reliable equipment.

1. Main alternator stator windings.
   a. Disconnect the stator leads from the excitation control package, and check for continuity between the following pairs: T1-T4, T2-T5, T3-T6, T7-T10, T8-T11, T9-T12. The resistance between any of the above pairs should be 0.1236 to 0.1366 ohms at 77 F (25 C).

      A very sensitive instrument (such as a Kelvin bridge) must be used for resistance readings. A standard ohmmeter will suffice to check continuity.

   b. Using a megohmmeter, check for insulation break-down between each pair of leads.
   c. Remove the end bell for the remaining checks.
2. Rotating Rectifier.

   Six rectifying diodes mount on the rotating rectifier, three are positive and three are negative.

   a. Unbolt each of the diode leads.

   NOTE: The diodes must be disconnected for testing, or false test readings may occur.

   b. Disconnect main alternator field leads which connect to exciter diode heat sinks.

c. Check each diode in the forward and reverse direction (refer to Test 6).

3. Rotating Exciter Armature

a. With rectifier leads still disconnected from previous checks, test between the following combinations of leads: (CR6-CR4), (CR3-CR1), (CR3-CR2), (CR6- CR5), (CR5-CR4) and (CR2-CR1).

The resistance reading on the ohmmeter for any of the above combinations of leads should be 0.645 (± 10%) ohms at 77 F (25 C).

b. Using the megohmmeter, check from each pair of leads to rotor case.

4. Main Alternator Field.

a. Measure the resistance of the main alternator field. Standard value is 2.475 to 3.025 ohms.

b. Measure the main field to rotor or ground with a megohmmeter.

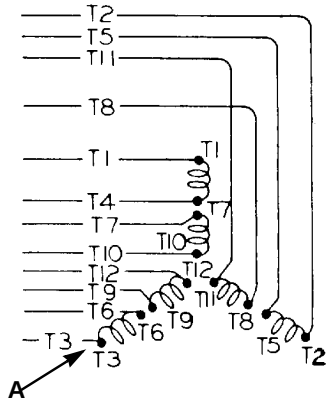

A.	Disconnect all 12 stator leads to test the stator.

Figure 105: Alternator Stator

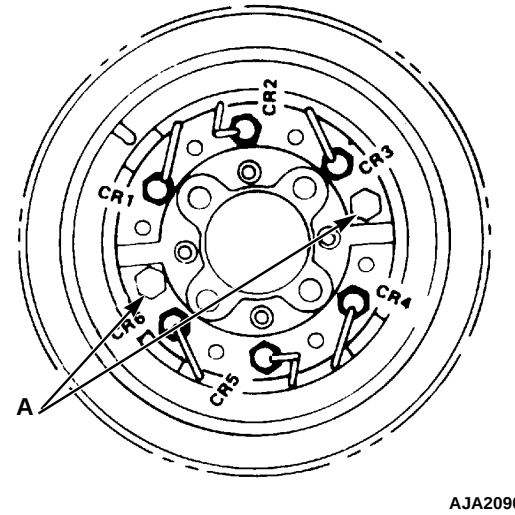

A.	Disconnect the main alternator field lead to test the diodes.

Figure 106: Rectifying Diodes

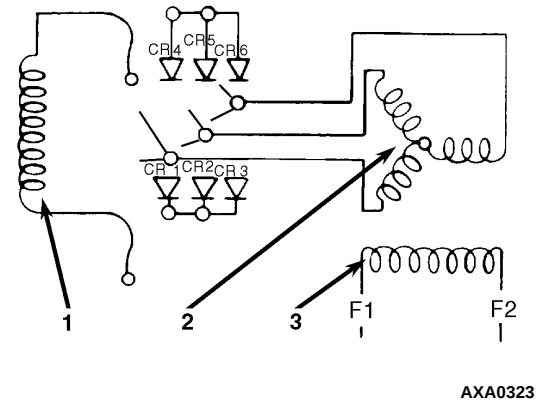

1.	Main Field
2.	Exciter Rotor
3.	Exciter Field

Figure 107: Alternator Test No. 8: Exciter Armature

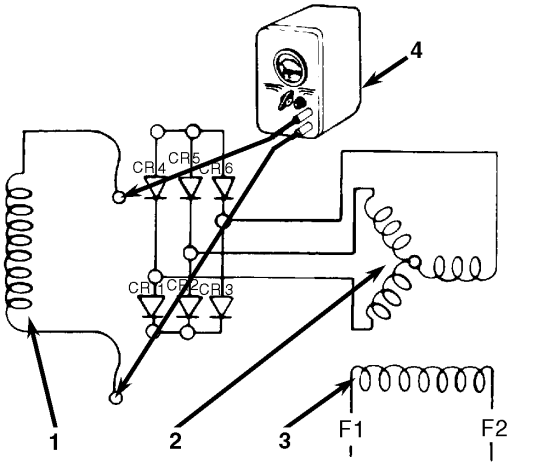

1.	Main Field
2.	Exciter Rotor
3.	Exciter Field
4.	Ohmmeter

Figure 108: Alternator Test No. 8: Main Field Winding

Emergency Operation

Emergency operation of generator set which has a defective regulator can be obtained by removing the regulator and connecting a No. 1073, No. 1076 or a No. 1034 (with both elements wired in parallel) automotive lamp between RED and adjacent GRN terminals on excitation control connector. This connection will result in higher than normal voltage when loaded and will result in overcharged batteries if used for more than 24 hours.

If there has been a complete failure of the exciter control package, the generator set can still be operated by using the 1073 light bulb attached to a 12 V source and then to the F1 wire and shorting the F2 wire at the relay board to the “CH’ ground stud. With no battery charging capabilities from the exciter control package, the unit battery voltage will eventually drop to a point at which the engine fuel solenoid will disengage and stop the engine (2 to 4 hours).

Megohmmeter

The use of a megohmmeter can be a valuable addition to the repair and maintenance of the generator set. The megohmmeter is essentially a high-range resistance meter (ohmmeter) with a built-in direct-current generator. This meter is of special construction with both current and voltage coils-enabling true ohms to be read directly, independently of the actual voltage applied.

The meter gives you a direct reading of insulation resistance in “ohms” or “megohms” (1 megohm = 1,000,000 ohms). For good insulation, the resistance usually reads in the megohm range.

Normally, good insulation has high resistance; poor insulation, relatively low resistance. The actual resistance values can be higher or lower, depending upon such factors as the temperature or moisture content of the insulation (resistance decreases with increase in temperature or moisture). They can be quite different for a generator tested three days in a row, yet not mean bad insulation. What really matters is the trend in readings over a time period, showing lessening resistance and warning of coming problems. Periodic testing is, therefore, your best approach to preventive maintenance. One of the more popular megohmmeters used in the field today is the “Megger®” manufactured by:

AVO Biddle Instruments
Bluebell, Pennsylvania 19422
Area Code: (215) 646-9200

They may be contacted for more information on how to use the megohmmeter for testing or about various types of megohmmeters available.

Maintenance Procedures

The following paragraphs cover detailed maintenance procedures, including disassembly and assembly of equipment for necessary component removal and replacement. Many repair or replacement operations can be performed without extensive disassembly of the generator.

WARNING: DO NOT attempt adjustments or changes in wiring while a unit is in operation. The unit generates sufficient voltage to cause severe and possible fatal shock. Use extreme caution when operating in wet or damp locations.

General Inspection

Inspect the entire unit to see that controls are in order and that there are no loose nuts, bolts, electrical connections or fittings. Inspect for secure engine to generator mountings. Remove any waste material from area around the unit. Check battery connections.

Insulation

Inspect insulation on wires, coils and control components. See that insulation is not frayed, broken or deteriorated. Replace wire having damaged insulation.

Field Coils, Stator Windings

Visually inspect the field coils and stator windings, their leads and connections to determine if they are electrically and mechanically satisfactory. Look for any evidence of overheating, burned or frayed insulation, loose connections, foreign matter, etc.

Generator Housing

Feel the alternator housing cautiously for abnormal temperatures as determined by previous experience with the unit. If the generator is overheated, check the winding temperature with thermometer, locate the cause such as lack of ventilation, overload, etc., and correct the condition or shut down the generator. Inspect the generator housing for obstruction of air passages.

Generator Bearing

All alternators covered in this manual are fitted with a permanently lubricated bearing which requires no maintenance in normal service.

Impeller Fan

Visually inspect the impeller fan to ascertain that no vanes are missing. Visually inspect the fan is not encrusted with dirt or other foreign matter to the point where it will not function properly.

Coupling

Disc type coupling. Inspect to see that coupling bolts are tight and that the generator is solidly secured to the engine.

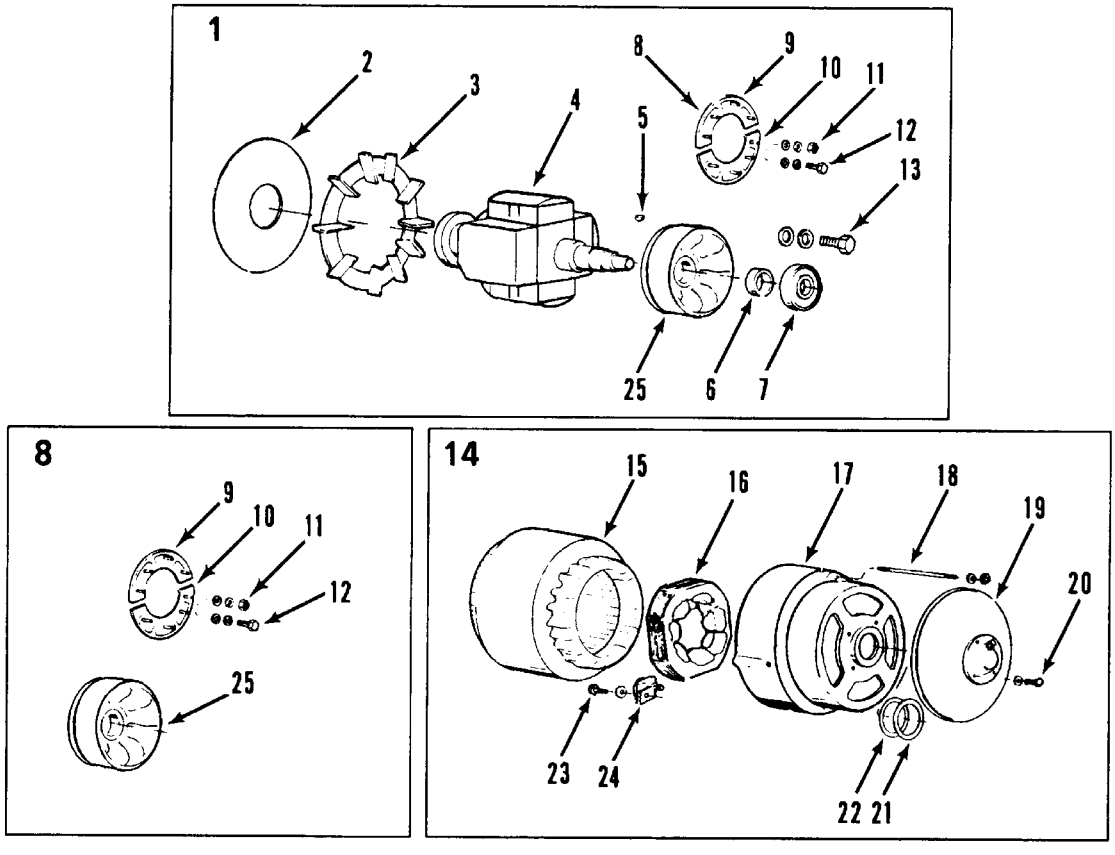

AXA0325

1.	Rotor Assembly	14.	Stator and End Bell Assembly
2.	Disc, Rotor Drive	15.	Stator, Wound
3.	Blower, Generator	16.	Exciter, Field
4.	Rotor	17.	Bell, End
5.	Key	18.	Stud, Bell
6.	Spacer, Bearing	19.	Cover, End Bell
7.	Bearing/Seal, Rotor	20.	Screw, Mounting End Bell Cover
8.	Exciter Assembly, Rotor	21.	Gasket, End Bell Cover
9.	Rectifier, Positive Assembly	22.	O-ring
10	Rectifier, Negative Assembly	23.	Screw, Retainer
11.	Nut, Rectifier Assembly	24.	Retainer, Exciter
12.	Screw, Mounting Rectifier	25.	Rotor
13.	Screw, Mounting Bearing		

Figure 109: Alternator Assembly

Rewiring Procedures for Changing the Generator Set Output Voltage

The alternator stator features a 12 lead design that contains two separate windings for each of the three output phases. The 12 leads are numbered T1 through T12. All rewiring is performed inside the control box.

All generator sets are factory wired for 460 Vac power output. 460 Vac operation requires that the two individual windings in each of the three phases be connected in series: T4 tied to T7, T5 tied to T8, and T6 tied to T9. The three output phases are:

Phase	Wires
A (Black)	T1
B (White)	T2
C (Red)	T3

230 Vac operation requires that one of the two windings in each of the three phases be connected in parallel: T4, T5, and T6 are tied together. The three output phases are:

Phase	Wires
A (Black)	T1, T7 (tied together)
B (White)	T2, T8 (tied together)
C (Red)	T3, T9 (tied together)

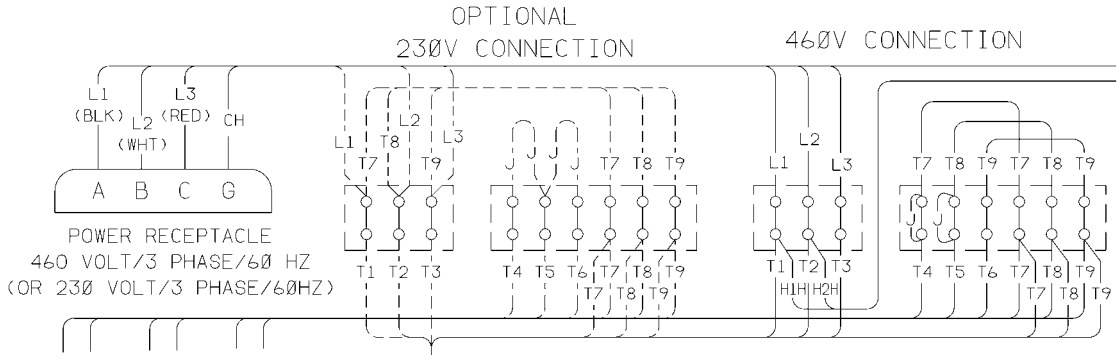

Figure 110: Changing Output Voltage

Rewiring Procedure for Changing the Output Voltage from 460 Vac to 230 Vac

WARNING: Disconnect the unit battery to prevent the unit from accidentally starting during rewiring.

1. Refer to the unit wiring diagram for illustrations of the proper wire connections.
2. Disconnect Wires:
   a. Remove wire T7 from T4 connection, wire T8 from T5 connection and wire T9 from T6 connection on the main output terminal block.
   b. Remove jumper wires on the terminal block from the T4 connection and T5 connection.
3. Reconnect Wires:
   a. Install wire T7 lead on L1 (Black Wire) terminal, wire T8 on L2 (White Wire) terminal and wire T9 lead on L3 (Red Wire) terminal.
   b. Connect T4 jumper wire lead to J5 wire terminal. Connect T5 jumper wire lead to J6 wire terminal.
4. Change output receptacle to 230 Vac.
5. Change voltage decal and nameplate markings from 460 Vac to 230 Vac.

Structural/Accessory Maintenance

Unit Inspection

Inspect the unit during unit pre-trip inspection and scheduled maintenance intervals. Look for loose or broken wires or hardware, and other physical damage which might affect unit performance. Repair if required.

NOTE: See Service Guide chapter in this manual for the correct service interval for your unit. 250 or 500 hour inspection/service intervals are required in extreme operating conditions.

Mounting Bolts

Check and tighten all engine and control box mounting bolts every 1,000 operating hours. Unit mounting hardware should be inspected for tightness during every pretrip.

Mounting Bolt	Torque
SGSM Units:	
Tubular Mounting Arm to Unit Frame	203 N.m (150 ft-lb)
I-Beam Clamp Screw	203 N.m (150 ft-lb)
SGCM Units:	
Mounting Arm to Unit Frame	88 to 115 N.m (65 to 85 ft-lb)
Chassis Clip Bolt	162 to 176 N.m (120 to 130 ft-lb)
SGCO Units:	
Upper Clamp	Lock clamp with lock pawl
Lower Mounting Bolts	203 N.m (150 ft-lb)
All Units:	
TK486 Engine	203 N.m (150 ft-lb)
Exciter Control Box	20 to 27 N.m (15 to 20 ft-lb)
Power Cord Receptacle	20 to 27 N.m (15 to 20 ft-lb)
Fuel Tank	81 to 88 N.m (60 to 65 ft-lb)

Radiator Fan Location

The radiator fan and hub assembly mounts on the water pump pulley. When installed, the fan blade should be in the orifice with 65 to 70 percent of the blade width to the air discharge side for proper fan performance.

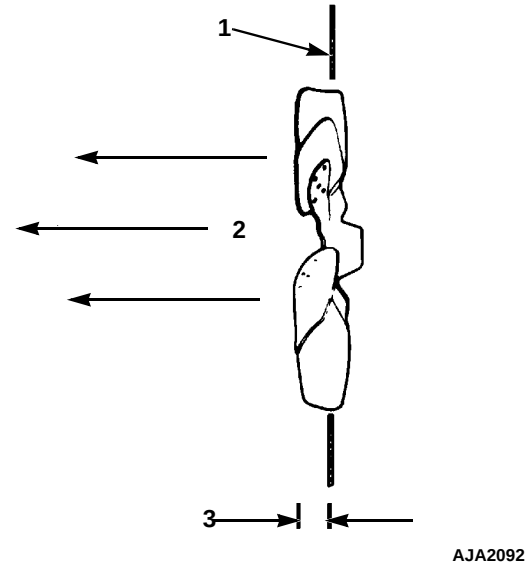

1.	Radiator Coil Orifice
2.	Airflow Direction
3.	65 to 70 Percent of Fan Blade Depth to Air Discharge Side of Orifice

Figure 111: Radiator Fan Blade Placement

SGSM 2000 Typical Unit Installation

1. Attach the mounting arm assemblies on each end of the unit. Two sets of mounting bolt holes are provided on the mounting arms.

NOTE: The clear insulator pad should be located between the steel mounting arms and the inside of the unit frame members. The stainless steel plate should be placed on the outside of the unit frame members.

2. Move the unit under container or trailer chassis. Place each mounting channel on top of a chassis frame member. Locate each channel as close to the vertical web of the chassis member as possible.

CAUTION: Keep all container or trailer electrical lines and air lines away from the channel to prevent damage during unit installation and operation.

3. Torque the mounting bolts:
   - Mounting Arm to Unit Frame: 88 to 115 N.m (65 to 85 ft-lb)

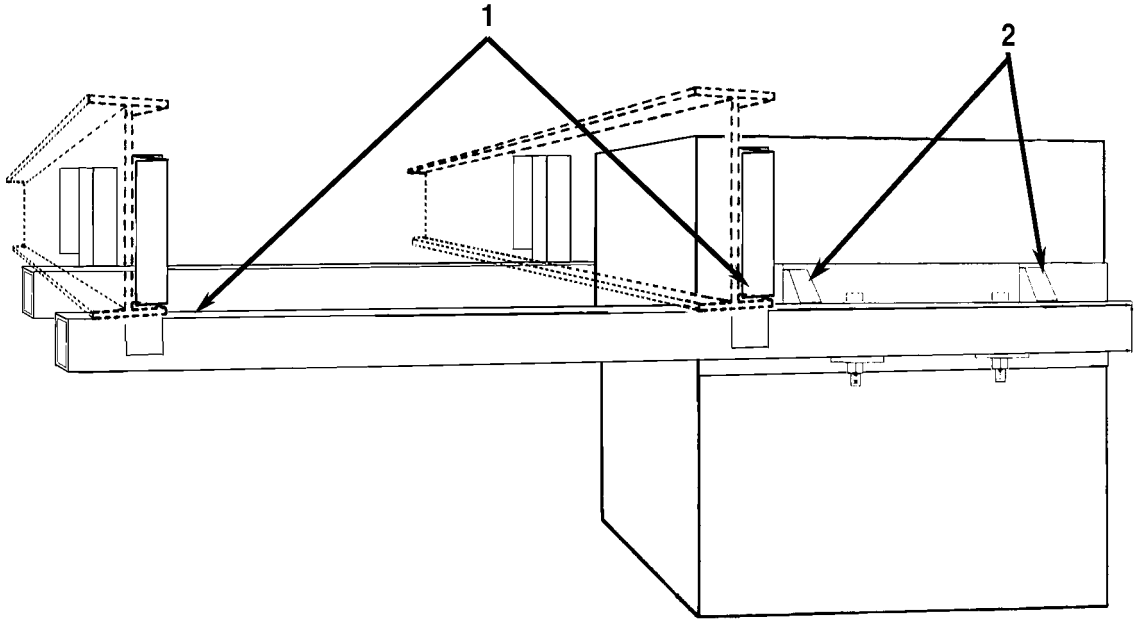

1.	Mounting Arm Tube and Channel Assembly
2.	Unit Mounting Bracket Assembly

Figure 112: SGSM 2000 Side Mount Installation — Typical

SGSM 2000 Keener Arm Unit Installation

1. Attach mounting arm assemblies to unit with clamp screw end of the channel facing the rear side of the unit. Torque mounting bolts that fasten mounting arms to the unit to 203 N.m (150 ft-lb).
2. Place mounting arm clamp screw assemblies in open (down) position.
3. Open each slider channel at least 200 mm (8 in.).
4. Move the unit under container or trailer chassis. Place fixed gripper channels on unit over edge of chassis I-beam.
5. Seat the chassis I-beam against the back of both fixed gripper channels. Move each slider channel forward over the back edge of the chassis I-beam.
6. Place the eye bolts over the slider pins by adjusting the bolt length as necessary.
7. Insert quick release pins in eye bolt handles to lock the eye bolts in the closed (lock) position.
8. Place the clamp screw assemblies on the rear edge of the second chassis I-beam.
9. Seat each clamp firmly against the edge of the I-beam and tighten clamp screw. Torque each clamp screw to 203 N.m (150 ft-lb).

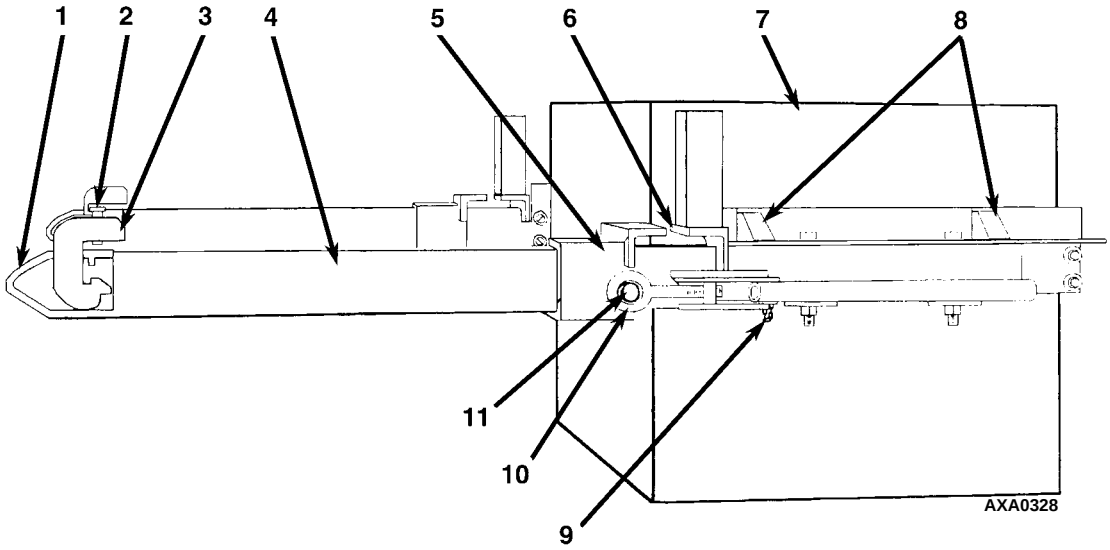

1.	Clamp Channel	7.	Unit
2.	Clamp Screw	8.	Unit Mounting Bracket Assembly
3.	Mounting Arm Clamp	9.	Chain and Quick Release Pin
4.	Mounting Arm Tube	10.	Eye Bolt
5.	Slider Channel	11.	Slider Pin
6.	Fixed Gripper Channel		

Figure 113: SGSM 2000 Side Mount Installation — Keener Arm

SGCM 2000 Unit Installation

1. Attach the mounting arm assemblies on each end of the unit. Two sets of mounting bolt holes are provided on the mounting arms. Use the top set of holes when mounting the unit on a container or trailer chassis with 254 mm (10 in.) beams. Use the bottom set of holes when mounting the unit on a container or trailer chassis with 305 mm (12 in.) beams.

NOTE: The clear insulator pad should be located between the steel mounting arms and the inside of the unit frame members. The stainless steel plate should be placed on the outside of the unit frame members.

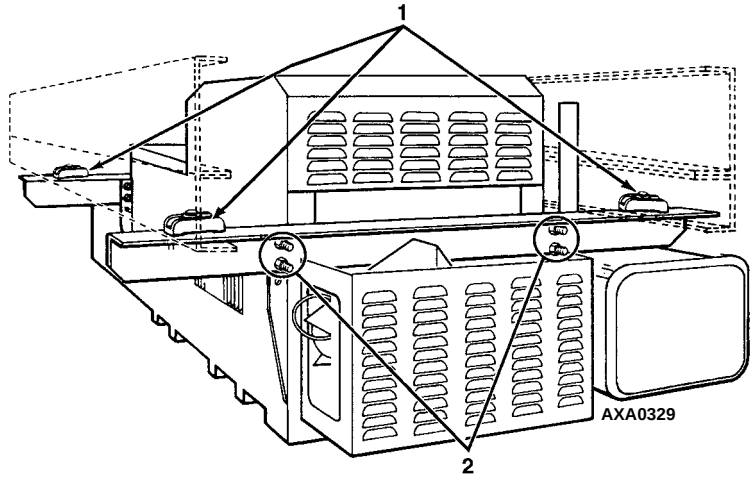

1.	Fasten Chassis Clips on the Inside Edge of each C-Beam and TIghten Bolts
2.	Tighten Mounting Arm to Unit Bolts

Figure 114: SGCM 2000 C-Section Chassis Centermount Installation

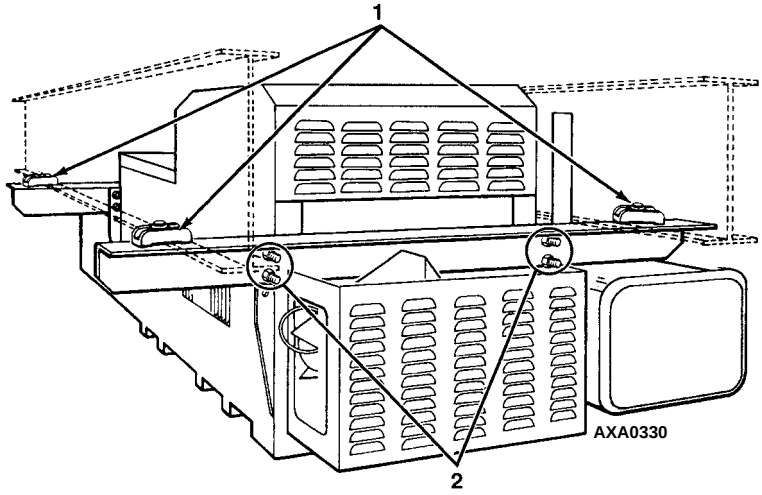

1.	Fasten Chassis Clips on the Outside Edge of each I-Beam and TIghten Bolts
2.	Tighten Mounting Arm to Unit Bolts

Figure 115: SGCM 2000 I-Beam Centermount Installation

2. Mount the power receptacle on the front mounting plate.
3. Move the unit under container or trailer chassis. Place each mounting clip on top of a chassis frame member. Locate each clip as close to the vertical web of the chassis member as possible.

CAUTION: Keep all container or trailer electrical lines and air lines away from the clips to prevent damage during unit installation and operation.

4. Torque the mounting bolts:
   - Mounting Arm to Unit Frame: 88 to 115 N.m (65 to 85 ft-lb)
   - Chassis Clip Bolt: 162 to 176 N.m (120 to 130 ft-lb)
   - Power Cord Receptacle: 20 to 27 N.m (15 to 20 ft-lb)

SGCO 2000 Clip-on Corner Clamp Unit Installation

1. Pull the lock pawl handle forward. Lift the clamp handle to rotate the clamp shaft 90 Degrees.
2. Lift the unit into mounting position on front wall of the container. The foot of generator set mounting clamp should fit into mounting hole on each side of the container.

CAUTION: Take adequate precautions when lifting and mounting the generator set to prevent personal injury or unit damage.

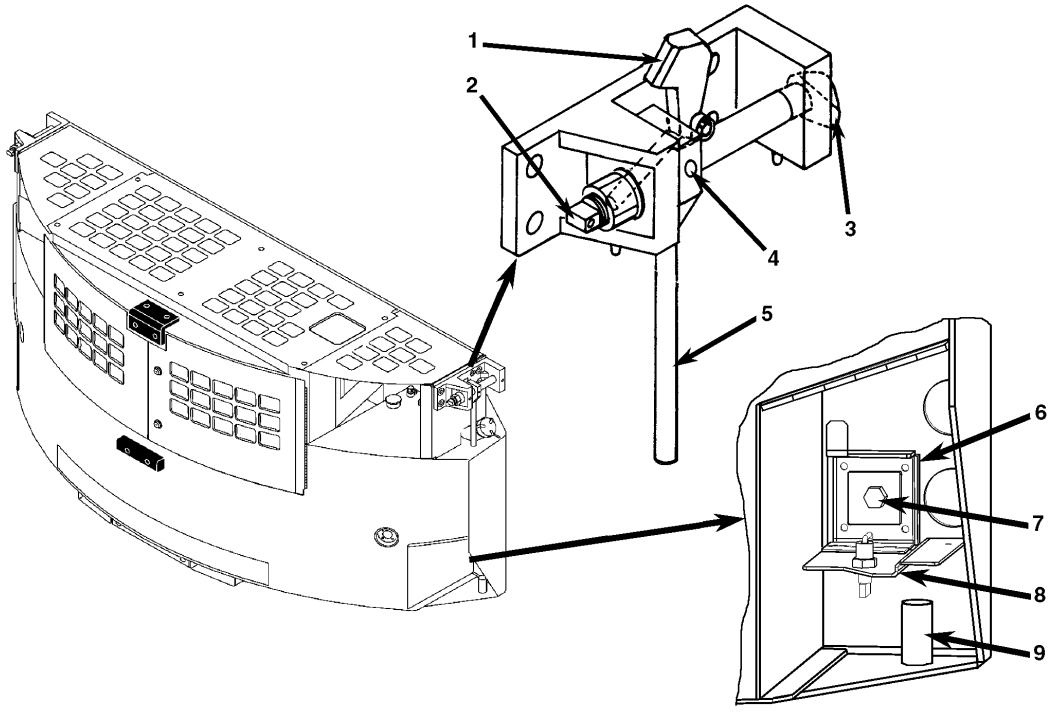

1.	Lock Pawl	6.	Mounting Bolt Retainer Assembly
2.	Mounting Clamp Flat	7.	Mounting Bolt
3.	Handle	8.	Retainer Door with Latch
4.	Shoulder Screw	9.	Bolt Holder Tube
5.	Mounting Clamp Foot		

Figure 116: SGCO 2000 Clip-on Corner Clamp Installation

3. Insert the foot of the mounting clamp fully into the container mounting hole. Pull lock pawl handle forward. Pull the clamp handle down to rotate the clamp shaft bolt 90° and clamp generator set to container.

CAUTION: Watch the clamp flat on threaded end of the mounting shaft when rotating the handle. The clamp flat should turn as the clamp handle rotates. With the mounting clamp in the locked position (handle down), the clamp flat must be horizontal. If the flat is not horizontal, check the clamp handle for a broken shoulder screw.

4. Release the lock pawl to hold the clamp handle in the locked (down) position.

CAUTION: Excessive vibration or unit malfunction can occur if mounting clamps are not properly secured. The generator set MUST be tight against the container.

5. Check to be sure the generator set frame fits tightly against the container. Turning the mounting clamp handle should pull the generator set frame tight against the container front wall. If necessary, tighten the mounting clamp. The mounting clamp can be tightened or loosened by turning the nut on the head of the clamp shaft.

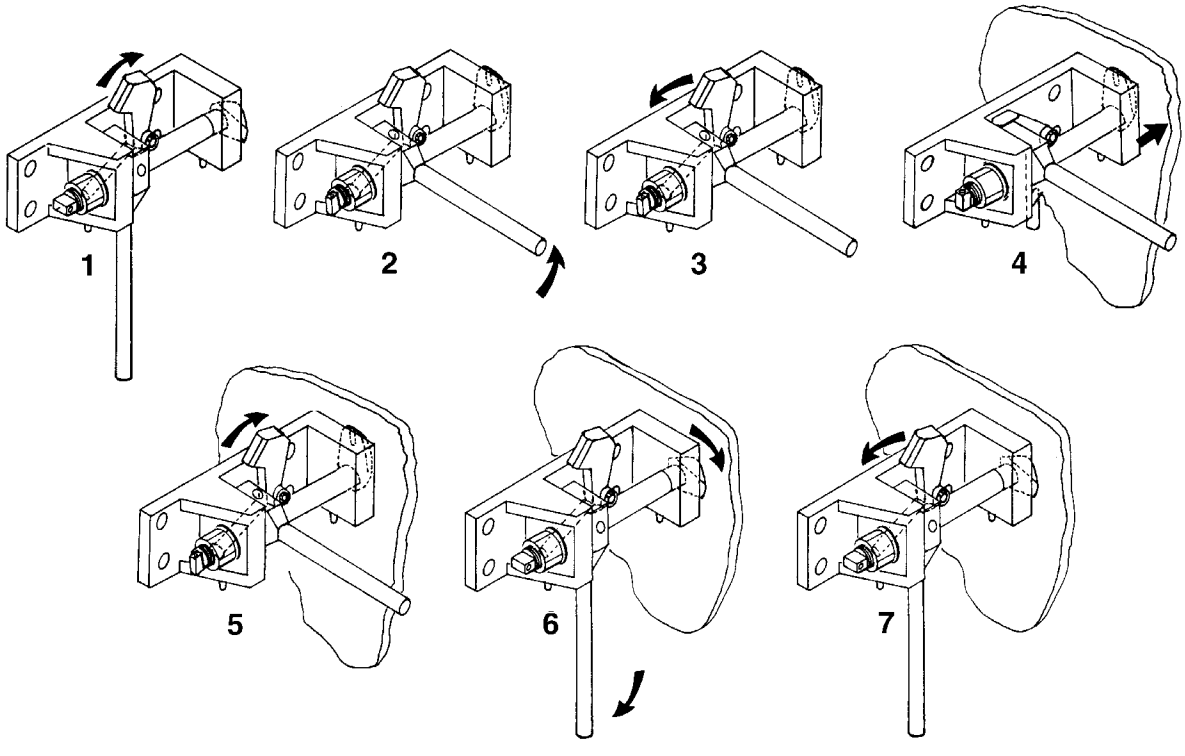

1.	Lift (Unlock) Lock Pawl	5.	Lift (Unlock) Lock Pawl
2.	Rotate Clamp Handle Up 90 degrees	6.	Rotate Clamp Handle Down 90 degrees
3.	Release (Lower) Lock Pawl	7.	Release (Lower) Lock Pawl
4.	Insert Mounting Clamp Foot in Container Mounting Hole	8.	

Figure 117: SGCO 2000 Clip-on Corner Clamp Installation Procedure

6. Install the lower mounting bolts:
   a. Remove the retaining pin from the lower mounting bracket.
   b. Remove the mounting bolt and backup plate from the keeper nut. Put the mounting bolt through the backup plate and install the bolt in the mounting hole.
   c. Tighten the lower mounting bolts to 203 N.m (150 ft-lb).
   d. Install the retaining pin and hair pin key to prevent accidental loss of the mounting bolt and backup plate during unit operation.

SGCO 2000 Clip-on Header Pin Unit Installation

1. Lift the unit into mounting position on front wall of the container. Both header pins of generator set mounting channel should fit into mounting holes on top of the container.

CAUTION: Take adequate precautions when lifting and mounting the generator set to prevent personal injury or unit damage.

2. Check to be sure the generator set frame fits tightly against the container.

CAUTION: Excessive vibration or unit malfunction can occur if mounting clamps are not properly secured. The generator set MUST be tight against the container.

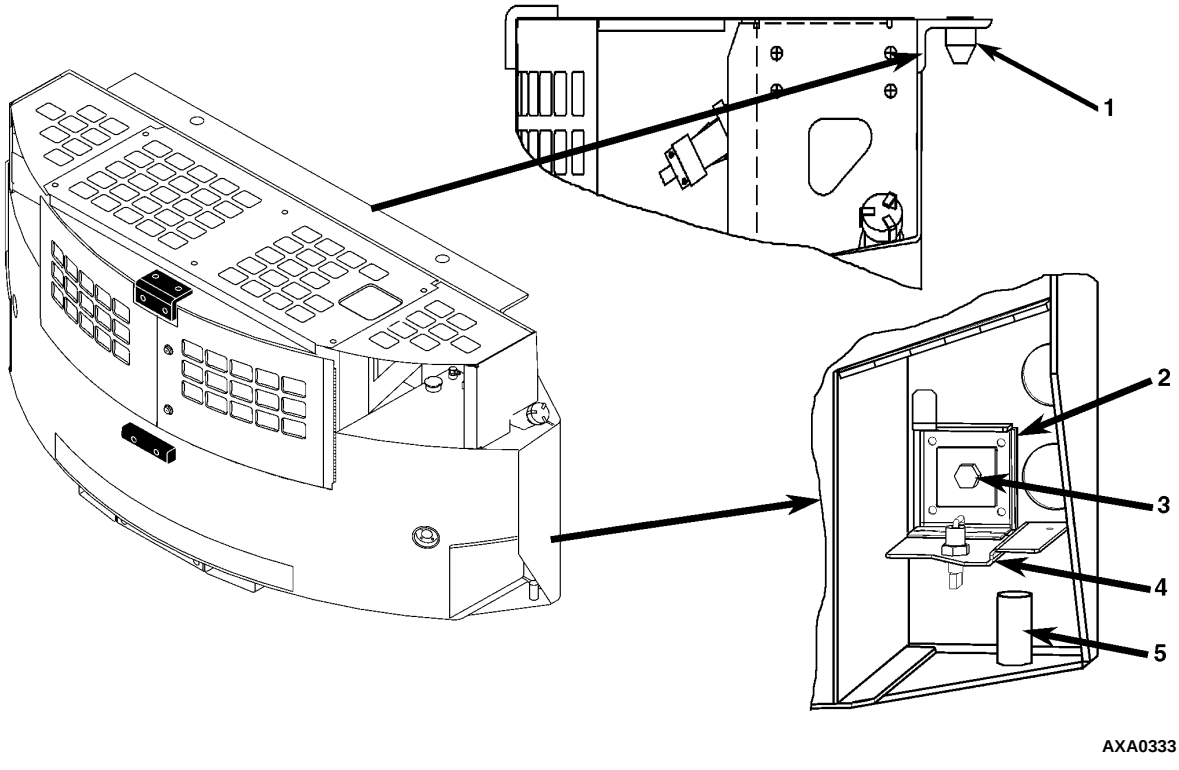

1.	Header Pin	4.	Retainer Door with Latch
2.	Mounting Bolt Retainer Assembly	5.	Bolt Holder Tube
3.	Mounting Bolt		

Figure 118: SGCO Clip-on Header Pin Mounting Installation

3. Install the lower mounting bolts:
   a. Remove the retaining pin from the lower mounting bracket.
   b. Remove the mounting bolt and backup plate from the keeper nut. Put the mounting bolt through the backup plate and install the bolt in the mounting hole.
   c. Tighten the lower mounting bolts to 203 N.m (150 ft-lb).
   d. Install the retaining pin and hair pin key to prevent accidental loss of the mounting bolt and backup plate during unit operation.

Unit Inspection

Inspect the unit during unit pre-trip inspection and scheduled maintenance intervals. Look for loose or broken wires or hardware, and other physical damage which might affect unit performance. Repair if required.

NOTE: See Service Guide chapter in this manual for the correct service interval for your unit. 250 or 500 hour inspection/service intervals are required in extreme operating conditions.

Radiator Coil

Clean the radiator every 1,000 operating hours. Blow compressed air from the outside of the coil in toward the condenser fan to clean coil (the direction opposite the normal air flow). Inspect the coil and fins for damage and repair if necessary.

CAUTION: Air pressure should not be high enough to damage coil fins.

Mechanical Diagnosis

NOTE: This diagnosis guide applies to units equipped with TK486 engines. For major repair of TK486 engines, refer to Overhaul Manual, TK 50136.

Diagnosing Unit Conditions

Condition	Possible Cause	Remedy
Unit switch On; LCD backlight does not come on	Corroded battery cable connections	Clean and tighten
	Batteries discharged	Charge or replace batteries
	Fuse link open (blown)	Check for short circuit and replace fuse link
	Circuit breaker CB1 open	Check for short circuit. Turn unit switch OFF to allow CB1 to reset
	Circuit breaker CB1 defective	Replace circuit breaker
	Defective On/Off switch	Check switch
	Open circuit	Check 2, 2B, 2C and 8 circuits
Unit switch On (controller LCD backlight is On) but engine does not crank	Batteries discharged	Charge or replace battery
	Corroded battery connections	Clean and tighten
	Defective starter relay or open circuit	Replace relay; check 8 and 52 circuits
	Defective starter solenoid	Replace solenoid
	Defective starter	Repair starter
	Water in cylinders	Check for hydrostatic lock. Remove injectors and turn engine slowly
Starter motor turns but engine does not crank	Starter clutch defective	Replace
Engine cranks but fails to start	Fuel solenoid not energized	Check 8D, 8DP circuits and fuel relay. Check the Engine Select screen in the Guard submenu of the controller: YanEn must be set to yES. See “Guard Menu” in the Microprocessor Controller chapter of this manual
	Fuel solenoid valve defective or stuck	Replace
	No fuel or wrong fuel	Fill with proper fuel
	Air cleaner clogged	Clean and refill oil reservoir on oil bath air cleaner; or replace dry air cleaner filter
	Exhaust plugged	Clear exhaust system
	Air heater defective	Replace defective air heater
	Air in fuel system	Bleed air
	Fuel pump defective	Replace pump
	Incorrect timing	Adjust timing
	Injection nozzles defective	Repair or replace nozzles
	Injection pump defective	Replace pump
	Compression low	Overhaul engine

Diagnosing Unit Conditions

Condition	Possible Cause	Remedy
Engine stops after starting	Alarm symbol in controller display	Check alarm code and repair fault (see “Alarm Codes Descriptions and Corrective Actions” in Electrical Maintenance chapter)
	Vent of fuel tank obstructed	Unclog vent
	Fuel filter obstructed	Replace filter element
	Clogged fuel tank or fuel lines	Clean fuel tank and fuel lines
	Air in injection pump	Bleed fuel system
	Circuit breaker CB1 open	Check for short circuit in unit wiring
Engine does not develop full power	Air cleaner or intake system clogged	Clean air intake system; clean and refill oil reservoir on oil bath air cleaner; or replace dry air cleaner filter
	Fuel tank vent clogged	Unclog vent
	Clogged fuel tank or fuel lines	Clean fuel tank and fuel lines
	Speed adjustment wrong	Adjust speed
	Insufficient fuel volume leaving filter(s)	Check for dirty filter or air in system
	Injection pump timing off	Adjust timing
	Nozzles defective	Repair or replace nozzles
	Delivery of fuel pump insufficient	Repair pump
	Worn injection pump plungers, delivery valve defective, injection rate too low, gum formations	Repair or replace pump
	Compression low or unbalanced	Overhaul engine
Engine knocks heavily	Wrong fuel	Change fuel
	Air in system	Bleed fuel system
	Fuel return line plugged	Remove return line restriction
	Injection nozzles fouled or opening pressure too low	Clean, repair or replace injection nozzles
	Valve out of adjustment	Adjust valves
	Delivery valve spring broken	Replace spring or repair injection pump
	Injection pump not timed	Retime injection pump
	Compression too low	Overhaul engine
	Rod or main bearing worn	Replace rod or main bearings
Engine speed too high	Mis-adjusted speed screw	Adjust speed screw
	Control rod sticks	Repair injection pump
Engine fails to stop when unit is Off	Fuel solenoid defective	Replace solenoid
	Injection pump defective	Replace pump

Diagnosing Unit Conditions

Condition	Possible Cause	Remedy
Engine runs hot	Coolant level is low	Add coolant
	Loose or worn water pump belt	Replace belt
	Generator overloaded	Check load
	Dirty radiator	Wash radiator
	Defective thermostat	Check or replace thermostat
	Cooling system heavily scaled	Clean cooling system
	Cylinder head gasket leaks	Replace cylinder head gasket. Use correct gasket
Oil pressure too low or drops suddenly. Minimum oil pressure for a hot engine is 117 kPa, 1.17 bar, 17 psi (low oil pressure switch setting)	Insufficient oil in pan	Add oil
	Defective oil pressure sensor	Check oil line to oil pressure sensor to see if it is blocked. Check oil pressure sensor. Replace if necessary
	Oil relief valve sticking	Disassemble and clean oil pressure regulator valve
	Worn oil pump, camshaft, main or connecting rod bearings, loose oil gallery plug	Repair engine
High oil consumption	Oil leakage	Check and eliminate possible causes at cylinder head cover, oil lines, oil filter, front timing cover or crankshaft seals
	Clogged air cleaner system	Clean air intake system; clean and refill oil reservoir on oil bath air cleaner; or replace dry air cleaner filter
	Clogged crankcase breather	Clean breather system
	Damaged valve seals	Replace seals on valve stem
	Worn valve stem	Replace valves
	Poor compression	Check and eliminate possible causes. Repair as necessary
	Broken piston rings or cylinder bore worn or scored	Have engine repaired and re-bored. Replace broken piston rings
Battery is not recharging system charging system	Loose connections in electrical system	Check all electrical connections and charging system
	Battery defective	Replace battery
	Voltage regulator wire harness defective	Replace wire harness
	Air heater does not shut off	Check preheat relay and preheat circuit
	Voltage regulator defective	Replace regulator

Diagnosing Unit Conditions

Condition	Possible Cause	Remedy
White Smoke (fuel is not burning)	Cold engine	Allow engine to warm up
	Air or water in fuel	Bleed system. Replace filters, clean fuel system, drain and clean tank and check supply tank for water. Use known good fuel
	Insufficient preheat	Check air heater
	Low compression	Check and eliminate possible causes. Repair as necessary
	Timing incorrect	Readjust timing
	Injection pump defective	Replace or repair pump
Blue Smoke (oil consumption)	Excessive oil consumption	Refer to High Oil Consumption. Repair as necessary
Black Smoke (excessive fuel to air ratio) • Engine is sooting heavily, emits thick black clouds of smoke	Cold engine	Allow engine to warm up
	Wrong fuel	Drain and refill with correct fuel
	Clogged air intake system	Clean or replace air cleaner
	Restricted exhaust system	Clean or replace
	Oil being drawn in	Check oil level in oil bath air filter
	Excessive load	Check drive system and engine oil pressure
	Injection pump not timed	Check timing of injection pump
	Opening pressure of nozzle is too low or needle sticks	Repair nozzle. Replace if necessary
	Injection amount too great	Have pump repaired
	Poor compression	Check and eliminate possible causes. Repair as necessary

Index

Electrical and µP-G Menu Flow Diagrams

SGSM 2000, SGCM 2000 and SGCO 2000 Wiring Diagram — Page 1 of 1

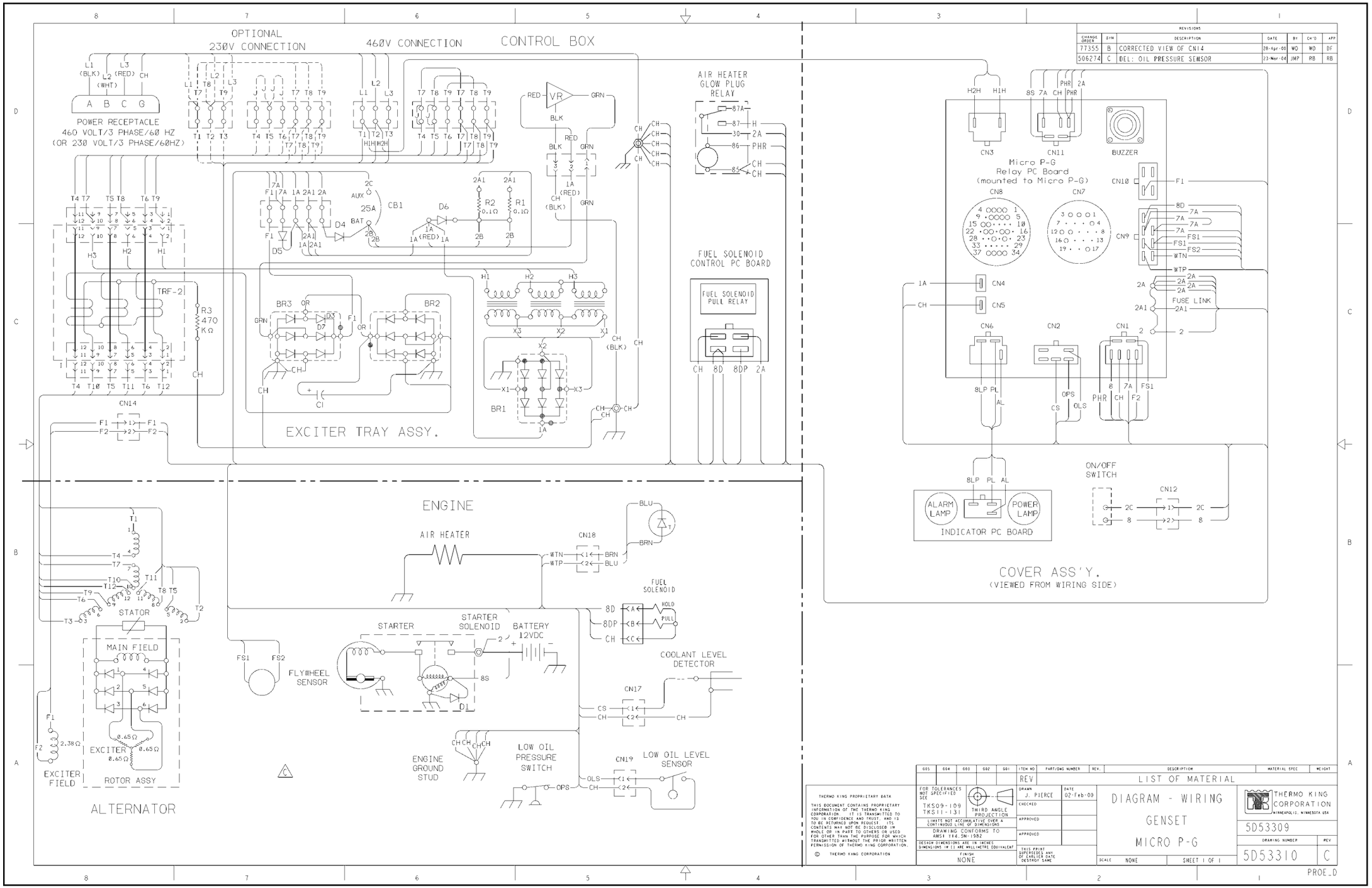

SGSM 2000, SGCM 2000 and SGCO 2000 Wiring Schematic — Page 1 of 1

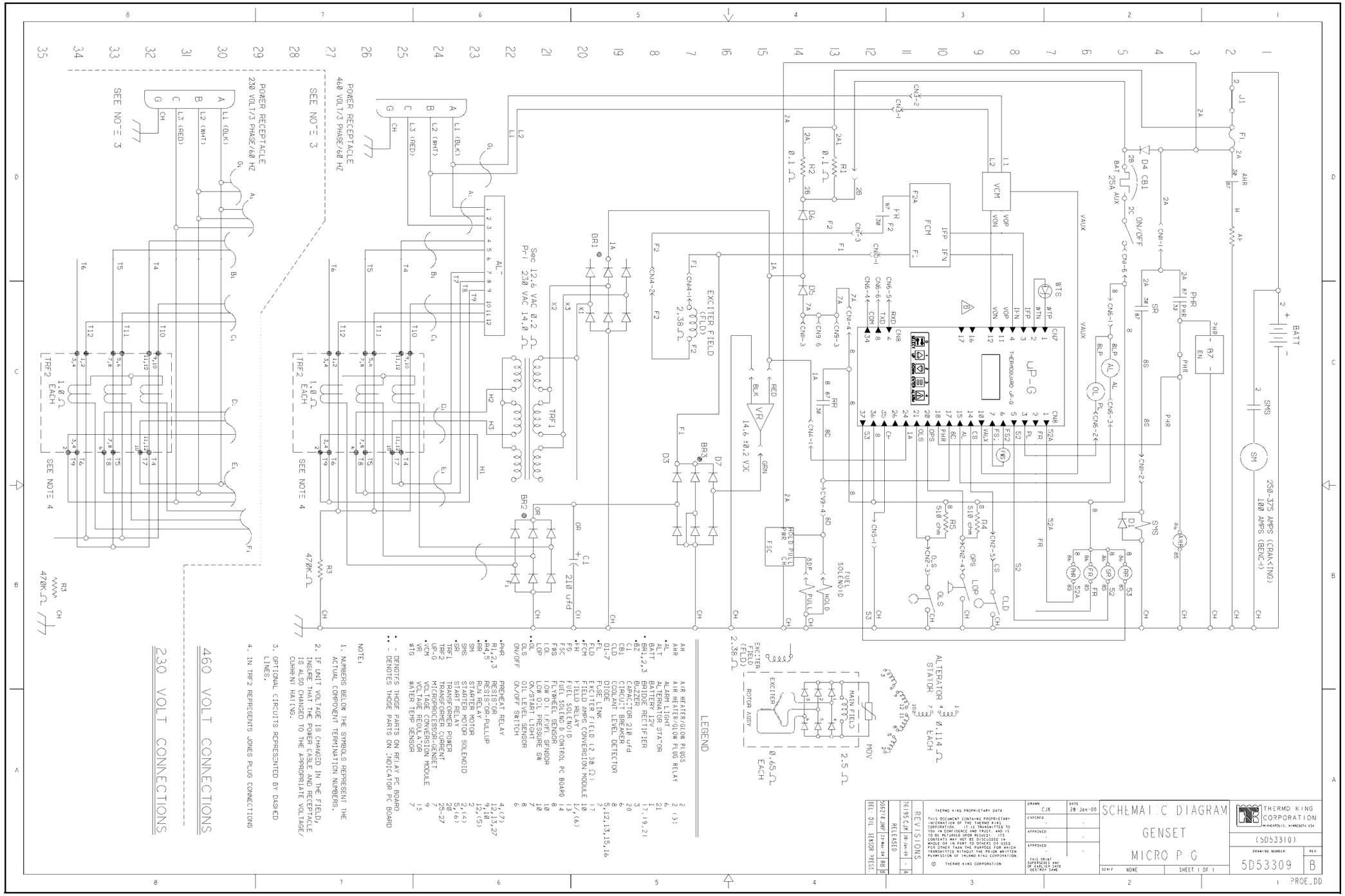

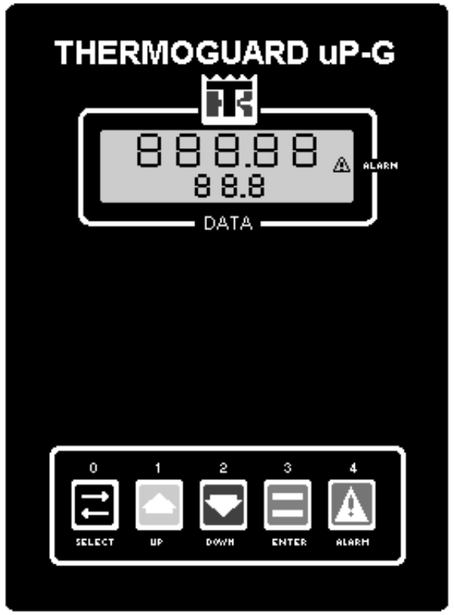

Keypad Operating Tips

Text Input:
- To enter a number: Press the UP or DOWN key to increase or decrease the value of a digit in the display.

To Enter a Controller Menu or Submenu:
- Press ALARM key to directly enter the Alarms menu.
- Press ENTER key to view the Software Version display.
- Press SELECT key to directly enter the Main Menu; or a submenu from the Main Menu.
- Press and hold SELECT key down for 3 seconds to return directly to the Standard Display.

To Enter a Command or a New Value in a Screen:
- Press ENTER key.

To Scroll in a Menu:
- Press UP key to scroll up.
- Press DOWN key to scroll down.

To Lock a View Screen on the Display:
- Press ENTER key to increase the display time of the current screen to 15 minutes. Press any key to unlock/exit screen.

Footnotes:

[1]When Delayed Cold Start is set to yES, controller shows “dELAy / AC” screen and alternator output remains off until engine temperature increases to 32 C (90 F).

[2]”PAUSE / run” screen indicates controller has stopped unit operation due to a shutdown alarm. Controller restarts unit if alarm condition is corrected.

[3]The Engine Select screen MUST be set to “yES” on units equipped with a TK486 (Yanmar) engine. Set this screen to “nO” on units equipped with a di 2.2 or se 2.2 engine. Default setting is “nO” on version 0100 software and “yES” on version 0200 software.

[4] AVR Gensets must be set to “yES”

CONTROLLER MENU GUIDE

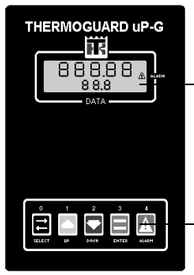

PAUSE MODE DISPLAYS — deLAY / AC[1] — PAUSE / run[2]

SOFTWARE DISPLAY — Version “XX.XX / rEu”

ALARM MENU
- Top Display shows the number of alarms stored in memory (e.g. “AL 3”)
- Bottom display shows a 2 digit code for the most recent alarm.
- View and write down all alarm codes.
- Press key to view additional alarm codes
- After the last alarm code (AL 1) has been viewed and recorded, the top display flashes “ENTER”.
- Press key to clear all alarm codes from the current display memory.
- Correct all problems before returning the unit to service.

MAIN MENU

VIEW MENU

VIEW MENU
- XX / HZ -- (Output Frequency)
- XXX / Ent -- (Engine Temp.)
- XX / OIL -- (Oil Temp.)
- XXXX / rPn -- (Engine Speed)
- XX.X / bAT -- (Battery Volts)
- X.X / Fld -- (Field Current)
- XXXX / rHr -- (Run Hours)

PRETRIP MENU

PRETRIP MENU
- Display flashes “EntEr / PrE”.
- Press key to start an automatic Pretrip test.
- Display shows “LOAd / PrE”.
- Display then shows the current Test.

- Display“88888 / 888”
- Oil Level Switch“-- OLS / PrE”
- Oil Press. Sensor“-- OPS / PrE”
- Oil Press. Switch“-- LOP / PrE”
- Coolant Level“-- CLS / PrE”
- WaterTemp-Sens.-- “UtS / PrE”
- RPM Sensor -- “FUS / PrE”
- Preheat Relay -- “PHr / PrE”
- Run Relay -- “rr / PrE”
- Volt Regulator -- “ur / PrE”
- Start Relay“Sr / PrE”
- Field Relay“Fr / PrE”
- Oil Press. Sensor“OPS / PrE”
- Oil Press. Switch“LOP / PrE”
- RPM Sensor“rPN / PrE”
- Output Voltage“AC / PrE”

- When test is complete, display shows test result: “PASS”, “FAIL” OR “CHECK”.
- If “FAIL” OR “CHECK” appear, press the key to view and correct any alarms that occur.
- If “PASS” appears, press the key to return to the Main Menu.

TEST MENU

TEST MENU
- tESt / |---|
- CntrL / tSt

Controller Test SubMenu
- CntrL / |---|
- AL / O “I” ---- (Alarm Light Test)
- OL / O “I” ---- (On Light Test)
- PHr / O “I” ---- (Preheat Relay Test)
- rr / O “I” ---- (Run Relay Test)
- Sr / O “I” ---- (Start Relay Test)
- Fr / O “I” ---- (Field Relay Test)

Press to start test. Display shows: (TEST) / “O” I.

Press to stop test.

GUARD MENU

GUARD MENU

— 0 0 0 0 / GUA

Enter access code 7.

Press to scroll cursor to next digit to right.

Press or to select number.

Press to enter access code. Display shows GUArd / |---|.

Guard SubMenu
- GUArd --- / |---|
- XXXXX --- / rHr --- (Run Hours)
- XXXXX --- / Ht1 --- (HM 1 Threshold)
- XXXXX --- / Hn1 --- (HM 1 Hours)
- XXXXX --- / Ht2 --- (HM 2 Threshold)
- XXXXX --- / Hn2 --- (HM 2 Hours)
- XXXXX --- / EOH --- (Engine Off Hours)
- XXXXX --- / rSI --- (Restarts after Powerup)
- XXXXX --- / rSt --- (Unit Restarts)
- LOPrS --- / n0 --- (Low Oil Press. Restart)
- dLYSt --- / yES[1] --- (Delayed Cold Start)
- YAnEn --- / yES[2,3] --- (Engine Select)
- nUrEg --- / nO[4] --- Select Regulator
- XXXXX --- / CAL --- (Voltmeter Calib.)

Press the Select Key to enter load value display. Top display flashes value to be changed.

Press the Up or Down Keys to select new number.

Press the Enter Key to load new number.

Press the Select Key to enter load value display.

Press the Up or Down Keys to select new value.

Press the Enter Key to load new value.

PROGRAM MENU

PROGRAM MENU
- PrGm / |---|
- F (or C) / dEG (Temperature Units)
- PSI (or bArS or kPA) / OIL (Pressure Units)

Press the Select Key to enter load value display. Top display flashes unit to be changed.

Press the Up or Down Keys to select new value.

Press the Enter Key to load new value.